SLIDING MODES AND THEIR APPLICATION IN VARIABLE STRUCTURE SYSTEMS

by V. I. Utkin

MIR
PUBLISHERS
MOSCOW

V. I. Utkin

SLIDING MODES AND THEIR APPLICATION IN VARIABLE STRUCTURE SYSTEMS

Translated from the Russian

by A. Parnakh

MIR

PUBLISHERS

MOSCOW

First published 1978

Revised from the 1974 Russian edition

На английском языке

© Издательство «Наука», 1974

© English translation, Mir Publishers, 1978

CONTENTS

PREFACE 9

Chapter I. INTRODUCTION 13

Sec. 1. Sliding Modes in Variable Structure Systems 15
Sec. 2. Conditions of Existence and Mathematical Description of Sliding Modes 22
Sec. 3. A. F. Filippov's Continuation Method 26
Sec. 4. Other Continuation Methods 28
Sec. 5. Limiting Processes for Substantiation of Sliding Equations 30
Sec. 6. Problems in the Theory of Sliding Modes for Systems with Discontinuous Control 36

Part I. SOME ASPECTS OF SLIDING MODE THEORY

Chapter II. EQUATIONS OF SLIDING MODES IN DISCONTINUOUS SYSTEMS

Sec. 1. Statement of the Problem. The Equivalent Control Method 40
Sec. 2. Systems Linear with Respect to Control 43
Sec. 3. Nonlinear Systems with Scalar Control 55
Sec. 4. Systems Nonlinear with Respect to Control 63
Sec. 5. Singularities in Vector Cases 68
Sec. 6. Physical Meaning of Equivalent Control 74

Chapter III. CONDITIONS FOR THE EXISTENCE OF A SLIDING MODE

Sec. 1. Problem Statement, Definition of a Sliding Mode and Necessary Conditions for Its Existence 78
Sec. 2. Application of Lyapunov's Second Method to Determine the Domain of a Sliding Mode 82
Sec. 3. Using Quadratic Forms for Finding the Sliding Domain 89
Sec. 4. Systems with a Control Hierarchy 101

Chapter IV. DESIGN

Sec. 1. Problem Statement 105

Sec. 2. Invariance of Sliding Equations with Linear Transformation of Discontinuity Surfaces 107
Sec. 3. The Diagonalization Method 109
Sec. 4. Quadratic Form-Based Design 112
Sec. 5. The Method of Controls 115

Part II. SCALAR CONTROL PROBLEMS 118

Chapter V. CONTROL OF FREE MOTION OF TIME-INVARIANT PLANTS

Sec. 1. Motion Equations and Problem Statement 122
Sec. 2. Conditions for Existence of a Sliding Plane 124
Sec. 3. Conditions of Sliding Motion Stability 130

Chapter VI. STABILITY IN CONTROL SYSTEMS OF LINEAR STATIONARY PLANTS

Sec. 1. Problem Statement 138
Sec. 2. Necessary Reaching Conditions 140
Sec. 3. Sufficient Reaching Conditions 144

Chapter VII. CONTROL OF FREE MOTION IN LINEAR TIME-VARYING PLANTS

Sec. 1. Motion Equations and Conditions for the Existence of a Sliding Plane 148
Sec. 2. Stability Conditions 150

Chapter VIII. CONTROL OF FORCED MOTION IN LINEAR PLANTS

Sec. 1. Combined Systems 154
Sec. 2. A Method of Design of a Control System without Measurements of Disturbances 156
Sec. 3. Design of Control Systems in Phase Canonic Form 160
Sec. 4. Extension to Systems of an Arbitrary Form 162

Part III. VECTOR CONTROL PROBLEMS 167

Chapter IX. CONTROL OF FREE MOTION OF LINEAR PLANTS

Sec. 1. Conditions for Existence of a Sliding Manifold for Time-Invariant Plants 170
Sec. 2. Conditions for Stability of Sliding Motions 176
Sec. 3. Stability in Systems with a Sliding Manifold 187
Sec. 4. The Control Hierarchy Method 194
Sec. 5. Control of Time-Varying Plants 199

Chapter X. CONTROL OF FORCED MOTION

Sec. 1. Combined Systems 201
Sec. 2. Systems without Measurement of External Signals 203

Chapter XI. INVARIANT CONTROL SYSTEMS

Sec. 1. Statement of the Problem and Conditions of Invariance of Sliding Motions 211
Sec. 2. Invariance with External Disturbances 212
Sec. 3. Invariance with Plant Parameters 213
Sec. 4. Selective Invariance 214

Chapter XII. THE USE OF SLIDING MODES IN OPTIMIZATION PROBLEMS

Sec. 1. Statement of the Problem and Principles Underlying Optimization Systems 216
Sec. 2. One-Dimensional Optimization at a Constant Rate of Search 217
Sec. 3. One-Dimensional Optimization with a Variable Rate of Search 224
Sec. 4. Optimizing a Multi-Dimensional Plant 227
Sec. 5. Optimization with Input Parameters Constrained 229
Sec. 6. Discussion of the Optimization Method 234

Chapter XIII. IDENTIFICATION OF DYNAMIC PLANTS

Sec. 1. Statement of the Problem and Equations of a Model with Variable Structure 237
Sec. 2. The Procedure of Model Parameter Adjustment 242
Sec. 3. Selection of Linear Operators. Examples 244

REFERENCES 248

PREFACE

This book is devoted to studies of sliding modes that can arise in discontinuous dynamic systems, or in systems described by differential equations with discontinuous right-hand sides and to the application of these modes to a wide range of control problems.

Such studies may be useful on two counts. Firstly, conventional theories on the existence and the uniqueness of a solution are generally inapplicable to discontinuous systems and therefore new tools should be developed to describe their behaviour. More specifically, the particular features in the behaviour of systems, the right-hand side of whose differential equation is a piecewise-continuous function of their coordinates, are that on a certain finite interval the number of discontinuity points may prove infinite. This behaviour, which is usually referred to as sliding mode somehow should be described. Secondly, purposeful introduction of this kind of behaviour into control systems opens up wide possibilities that seem to have been amply demonstrated in variable structure systems. Methods for design of various kinds of systems of this class have been systematically described in "Theory of Variable Structure Systems" (in Russian) by S. V. Emelyanov, V. I. Utkin, V. A. Taran, N. E. Kostyleva, A. M. Shubladze, V. B. Yezerov and E. N. Dubrovsky.

In this book the author wishes to show how the mathematical tools for studying sliding modes can be built around limiting processes. The gist of limiting processes is that an ideal discontinuous system is approximated by a certain real system whose behaviour is unambiguously determined everywhere and a

sliding mode is understood as a motion represented by the real system when its equations tend to the equations of the ideal system. Various cases of discontinuous systems with one or more discontinuity surfaces in their state spaces are treated in this light. All questions pertaining to the conditions of the existence of a sliding mode, which have received, incidentally, little attention in the literature, are solved on the basis of the concept of stability of A. M. Lyapunov.

The methods for studying sliding modes, which are the subject matter of part I, are employed in parts II and III to solve in consistent terms the most important problems usually handled by control engineering. Motions in sliding modes are induced in the system and direct analysis of the conditions for their generation leads to the conclusion that the design of control functions should in each case be performed in the class of variable structure systems. The design methods of parts II and III are to a considerable degree extensions of the results reported in the above mentioned monograph. In addition they also treat a number of new problem statements (e.g. Chapters XII, XIII and largely Chapter XI) while the "older" problems are treated in a more general statement. Thus, in this monograph, the main attention is given to scalar control systems with a discontinuity surface in the space of the error coordinate and its derivatives whereas in part II the coordinates of the state vector are arbitrary and in part III the control is a vector.

The results reported in the book were obtained chiefly through research conducted at the Variable Structure Systems Laboratory of the Institute of Control Sciences. The exception is the survey of the literature on mathematical description of sliding modes given in the introduction.

A decisive factor in my professional activity as well as in writing this book was the collaboration with Stanislav Vasilyevich Emelyanov whose contribution to assembling an enthusiastic body of researchers in variable structure system theory with whom the author is honoured to associate himself cannot be overestimated.

I feel obliged to thank Academician B. N. Petrov for his unswerving support over the author's entire stay in the Institute. Sincere gratitude is due to Professor M. A. Aizerman who initiated me into a scope of problems in mathematical description of sliding modes and helped in studies reported in

chapters II and III. I am thankful to G. S. Pospelov, Corresponding Member of the USSR Academy of Sciences and I. F. Shakhnov, Cand. Sci. (Phys.-Math.) for their criticism of the manuscript. I am indebted to Mrs. L. R. Govorova, an unerring aid in preparation of papers on variable structure systems.

V. I. Utkin

Chapter I

INTRODUCTION

In recent years, increasing attention has been given to systems where control actions are discontinuous functions of their coordinates and disturbances. Control hardware is most effective in such systems and may result in optimality.

Studies of such systems are in most cases extensions of the phase space method developed by A. A. Andronov and his followers [2]. The system state is represented by the position of the describing point in a space with the system coordinates along its axes. The paths of the describing point, referred to as state trajectories, represent the properties of a dynamic system; furthermore, by intelligent selection of control actions the state trajectories may be changed so as to impart the desired properties of the processes in the system.

The design problem in systems with discontinuous control actions usually is reducible to selection of surfaces in the phase space for the control function to have discontinuities. When certain relations, to be described below, are valid, a special kind of motion — the so-called sliding mode — may arise. This may be the case, for instance, if in the vicinity of the surface where the control function has discontinuities the state trajectories are directed towards this surface (Fig. 1).

Once on the discontinuity surface, the describing point evidently cannot move along any trajectory adjacent to that surface over any period, however short or finite. Indeed, in response to any shift, a motion always starts that returns the describing point to the discontinuity surface. Consequently, in the system under discussion the describing point can move only along the discontinuity surface; this motion is conventionally referred to as the sliding mode. At this point, a remark

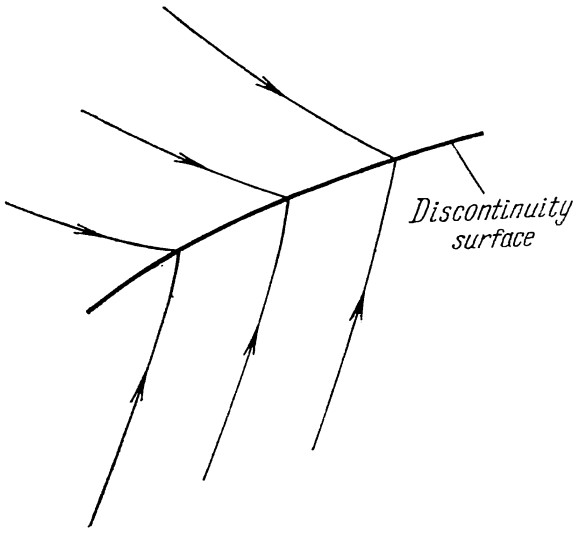

FIG. 1

is necessary that what has been described is a model of a sliding mode. In actual systems, all facilities responsible for discontinuous change of the control function always have small imperfections such as delay, hysteresis etc. In the above situation the imperfections make the switches of the control action occur at a finite frequency and the describing point oscillate in a certain finite vicinity of the discontinuity surface.

Sliding modes have a number of attractive features and so have long since been in use in solving various control problems. This kind of motion originally is believed to have been introduced into the system early in the 20th century during the development of vibrational controllers. Depending on the sign of misalignment between the desired and actual values of the controlled variable, the actuator can take only one of the two possible extreme positions. A short survey and analysis of publications in this field are given in an interesting paper [21] on the use of oscillation theory methods for study of vibrational controllers. Somewhat later vibrational controllers found wide application in voltage control of aircraft, automobile and tractor generators [72].

Subsequent studies have revealed that motion in sliding modes results in optimal control minimizing the function which characterizes the control performance [24, 71].

The potential of sliding modes was most completely revealed and used in research of variable structure systems initiated by S. V. Emelyanov in the Institute of Control Sciences. The theory of variable structure systems has been shaped into an independent field in the general theory of nonlinear systems.

The usefulness of sliding modes in solving very diverse control problems, and the basic design ideas of variable structure systems will be illustrated with the simplest examples.

Sec. 1. Sliding Modes in Variable Structure Systems

To obtain high dynamic performance in a variable structure system, the system is assumed to consist of several continuous subsystems, henceforth referred to as structures; each of these structures can prove unacceptable from the point of view of the quality of the control process, i.e. instability. To design a controller is to select the parameters for these structures so as to define a switching logics such that useful properties of the structures are preserved, and, in a number of cases, new effects are obtained. At the times when the structures change, the right-hand sides of the differential equations describing the system motion have discontinuities on certain surfaces in the system's state space. Therefore, sliding motions can arise in variable structure systems too. It is precisely the deliberate introduction of a sliding mode into the system that is the core of control algorithms in this class of systems. Let us take up some simple examples of usage of sliding modes which may seem obvious now, but some time ago they confirmed that an approach requiring change of the structure during control is legitimate and stimulated further research along this line. Papers where these problems are treated in a more general statement will be referenced.

The first example is the stability problem in a time-invariant control system of a plant whose motion is described by the equations

$$\left.\begin{aligned} \dot{x}_1 &= x_2 \\ \dot{x}_2 &= -a_2 x_2 - a_1 x_1 + u \end{aligned}\right\} \tag{1.1}$$

where x_1, x_2 are state variables *; a_1, a_2 are constant parameters; u is the control function. Let the control function be a piecewise linear function of x_1:

$$u = -\Psi x_1 \tag{1.2}$$

and assume that there are two linear structures in this system which are associated with the values α or $-\alpha$ ($\alpha = \text{const}$) of the coefficient Ψ. Let the coefficient a_2 be negative in Eq. (1.1) and the coefficient α be selected so that the system (1.1), (1.2) with $\Psi = \alpha$ has complex eigenvalues and with $\Psi = -\alpha$ it has real eigenvalues. The phase portraits of both structures are represented in Fig. 2*a*, *b* and each of the structures is unstable. Verify now that asymptotic stability can result from a change of the structure (note that for stability of a linear system the control should be complemented with x_2, a derivative of the coordinate x_1). Change the system structure on the straight lines

$$x_1 = 0, \quad s = cx_1 + x_2 = 0 \quad (c > 0, \ c = \text{const}) \tag{1.3}$$

The coefficient c will be selected such that the straight line $s = 0$ will be between the axis x_1 and the asymptote of hyperbolic trajectories associated with the structure $\Psi = -\alpha$ (Fig. 2*b*). Figure 2*c* is a phase portrait of the system with the law of structure change

$$\Psi = \begin{cases} \alpha \text{ with } x_1 s > 0 \\ -\alpha \text{ with } x_1 s < 0 \end{cases} \tag{1.4}$$

The phase portrait shows that the describing point invariably reaches the switching straight line $s = 0$ from any initial position. In the vicinity of the straight line the trajectories of both structures are directed towards it; therefore further motion will proceed in the switching or sliding mode along the straight line $s = 0$. What kind of equations is appropriate for description of motion in sliding mode is a question which will be discussed below; for the moment let us use some heuristic reasoning. Since in the sliding mode the describing point cannot leave any infinitesimal vicinity of the switching straight

* The space of some variable and its derivative is usually referred to as a phase state and the trajectories in this space are phase trajectories.

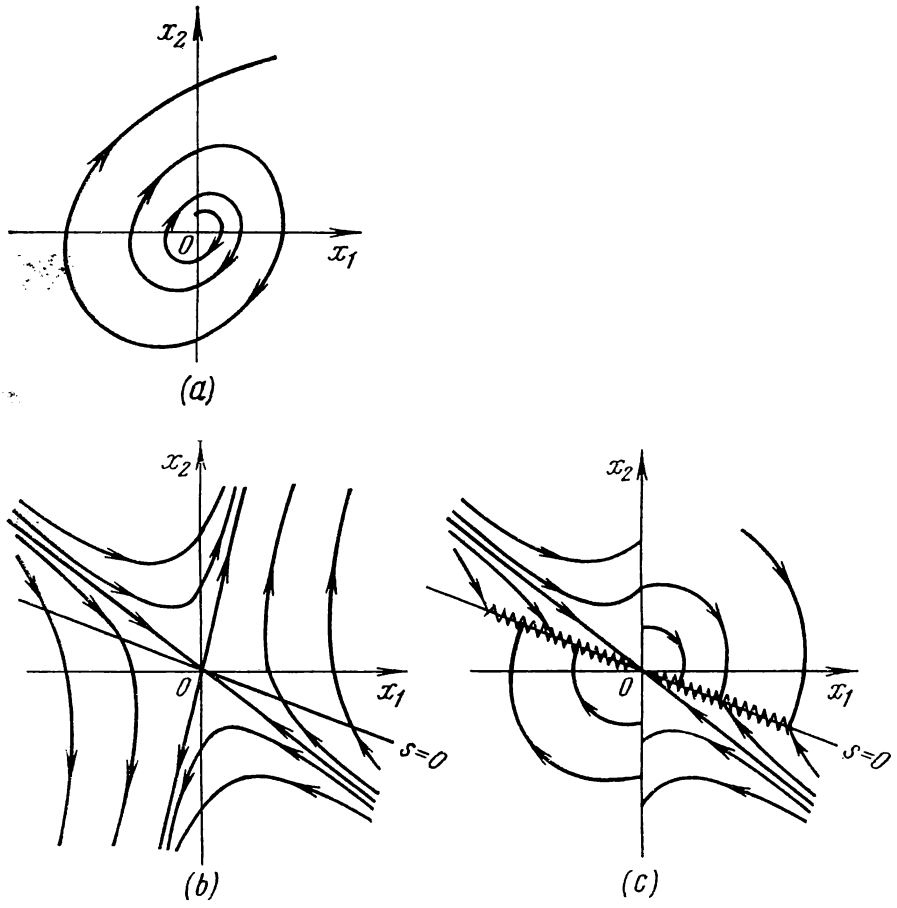

FIG. 2

line, the value of $cx_1 + x_2$ is equal to zero. Since $x_2 = \dot{x}_1$, we have

$$\dot{x}_1 + cx_1 = 0 \tag{1.5}$$

This is a first-order differential equation which is assumed to be a sliding equation. The solution is stable with $c > 0$ and, consequently, the variable structure system (1.1)-(1.4) also is stable during arbitrary initial conditions. What is important is that the stability results from the use of two "unacceptable" structures and of the deliberate introduction of a sliding mode into the system. This idea of design for arbitrary-order plants

with constant parameters is developed further in Refs [8, 10-16, 20, 25-27, 35-38, 46-48, 52, 53, 57, 58, 86, 106] *. In the theory of variable structure systems much attention was given to control of nonstationary systems. Two separate cases were treated. In the one, it was assumed that the nonstationarity is caused by wide-range changes of the plant responses and in the other, by external disturbances. The research was started by the author of Ref. [39]. He proved that whereas the control function depends on the controlled variable and its derivatives, the motion in a sliding mode is independent of the plant parameters and external disturbances, and the motion depends on the factors of the equation for the switching plane alone. [This fact is used in designs of controllers which insure, starting from a certain instant, existence of motion in a sliding mode with desired dynamic properties.]

Let us illustrate the idea of design with system (1.1) assuming that the coefficients a_1 and a_2 vary in time and these coefficients cannot be measured and only their range is known. Then the parameters α and c in (1.3) and (1.4) should be selected so that at any value of the coefficients a_1 and a_2 the switching straight line is placed as shown in Fig. 2*b*. In this case the phase trajectories and, accordingly, the motion beyond the switching line $s = 0$ depend on $a_1(t)$ and $a_2(t)$ but once on this line the state will remain on it and further motion in sliding mode is represented by equation (1.5). As the solution of equation (1.5) depends only on the parameter c which can be selected as desired, the sliding motion in the system does not depend on changes in the properties of the plant. A more detailed analysis of the approach to the design of systems with variable parameters with the use of the system variability principle and its extensions to plants of arbitrary order can be found in Refs [17, 18, 20, 40, 41, 43, 56, 62, 81].

Now let us cite a few examples illustrating the potential of sliding modes for the cases where plants are nonstationary due to external inputs, viz. setpoints or disturbances. To control is to make the motion independent of external disturb-

* The specifics of Refs [10-12, 27, 46, 47, 86] are in that the right-hand sides of equations for the systems treated there have discontinuities of the second kind. Therefore, in [46, 47, 89] the motion is studied with conditions for discontinuities introduced in Ref. [1] and in Refs [10-12, 27] using the so-called motion separation method.

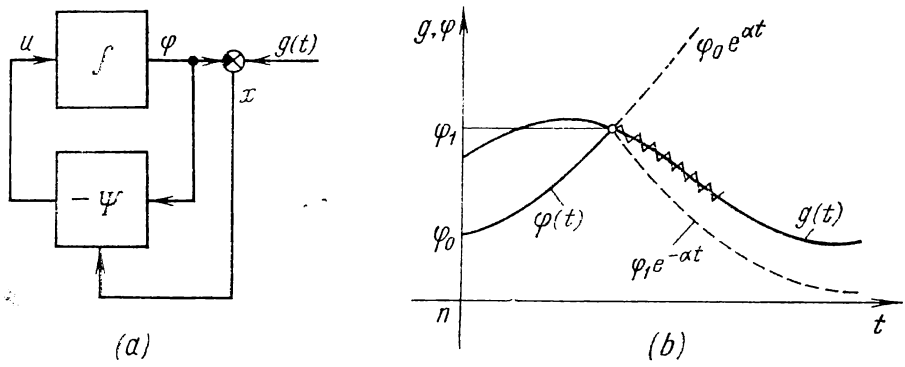

FIG. 3

ances and to insure that the controlled variable tracks the setpoint.

Let us first take up the latter requirement using the simplest first-order plant of Fig. 3*a*. There are two linear structures in the system because the feedback coefficient Ψ can take two values

$$\Psi = \begin{cases} \alpha \text{ with } x\varphi > 0 \\ -\alpha \text{ with } x\varphi < 0 \end{cases} \tag{1.6}$$

where x is the error equal to $g(t) - \varphi$; $g(t)$ is the setpoint. If at the initial time $g > \varphi$, as shown in Fig. 3*b*, then, by virtue of (1.6) there will be a positive feedback in the system and the coordinate φ, equal to $\varphi_0 e^{\alpha t}$ will "catch up" on the setpoint. Once the sign of the error is changed, the feedback becomes negative and the error becomes positive again (Fig. 3*b*). As a result, a sliding mode arises in the system during which the coordinate φ tracks the setpoint. * Rejection of a disturbance will be illustrated with a second order system where the plant and the servomechanism are integrators [Fig. 4*a*]. An external disturbance $f(t)$ is not accessible for measurement and is applied to the plant. The control function is viewed as piecewise linear function not only of the controlled quantity x which should

* It will follow if $|\dot{g}| < |\dot{\varphi}|$. It also should be noted that if φ and g are of different signs at the initial time and g does not change sign, no sliding mode arises because the controlled variable φ cannot change sign either. To make the coordinate track the setpoint, completing the control function u with a linear component $-kx$ ($k > 0$) is sufficient.

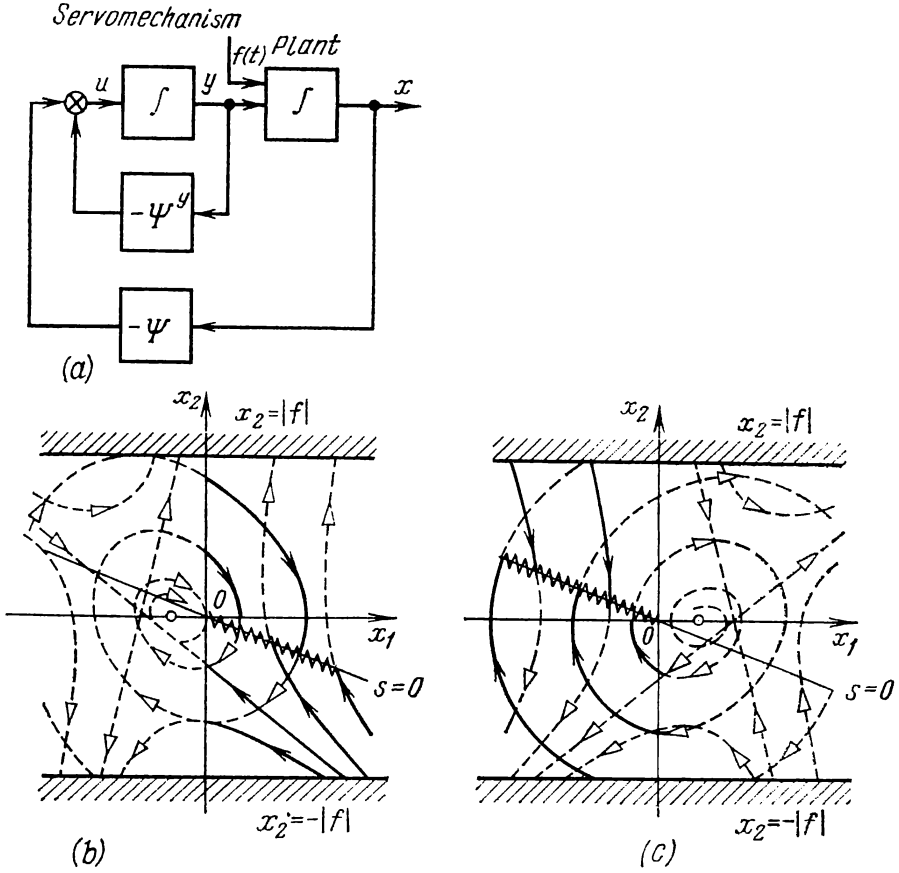

FIG. 4

be reduced to zero but also of the servomechanism output y. Then the behaviour of the plant and the system is governed by the equations

$$\left.\begin{aligned} y &= x_2 + f \\ \dot{x}_1 &= x_2, \\ \dot{x}_2 &= -\Psi_y' x_2 - \Psi' x_1 - \Psi_y f - \dot{f} \end{aligned}\right\} \tag{1.7}$$

Assuming that the disturbance $f(t)$ belongs to the class of functions

$$|f/\dot{f}| \leqslant B \quad (B = \text{const})$$

select the following switching logic for the variable structure

system

$$\Psi = \begin{cases} \alpha \text{ with } x_1 s > 0 \\ -\alpha \text{ with } x_1 s < 0 \end{cases}$$

$$\Psi_y = \begin{cases} B \text{ with } ys > 0 \\ -B \text{ with } ys < 0 \end{cases}$$

where $s = cx_1 + x_2$, α, $c = \text{const}$, $c > 0$.

As already noted, if there is no external disturbance, $f(t) \equiv 0$, the coefficient α can be selected so that over the entire straight line $s = 0$ a sliding mode will exist. (The phase portrait of such a system for any value of Ψ_y equal to B or $-B$ is of the form shown in Fig. 2*c*.) If $f(t) \not\equiv 0$, the singular points * of phase portraits of all the four linear structures shift from the origin of coordinates, and in addition the magnitudes and signs of the shift are dependent on the coefficients α, B, and the disturbance $f(t)$. Figure 4*b*, *c* shows separately the right-hand and left-hand semi-planes of the system (1.7) phase portrait for the region $|x_2| \leqslant f(t)$ where, by virtue of (1.7), the signs of y and $f(t)$ coincide. As is seen from the discussion of the phase portrait, the singular points are shifted so that the phase trajectories in the vicinity of the switching straight line $s = 0$ are directed towards it and a sliding mode occurs in the system**. The motion in a sliding mode is described by the homogeneous differential equation (1.5) whose solution is stable. Thus, the change of structure rejects the external disturbance that cannot be measured and after the cessation of the control process the error disappears. The details of making the controlled variable track the setpoint and be independent of external disturbances for systems of arbitrary order with constant and variable parameters are treated in Refs [30, 31, 42, 44, 59-61, 67, 82, 83, 85, 87, 88, 96-99, 113].

Sliding modes thus have been found highly effective in solving various problems for variable structure systems. The

* These are points where $\dot{x}_1 = 0$, $\dot{x}_2 = 0$.

** Strictly speaking, the curves of Fig. 4*b*, *c* are not state trajectories because disturbances make the system's differential equations nonstationary. Each curve should be regarded as the locus of points for which, at each fixed time, the tangential to the curve coincides with the state velocity vector. The design of a scalar control does not require data on the parameters and disturbances. However, it is essential to employ the error coordinates and its derivatives, the number of which depends on the order of the system.

design in most cases is reduced to generating sliding modes independent of the characteristics of the plant or of its disturbances. The design of a scalar control does not require data on the parameters and disturbances. However, it is essential to employ the error coordinates and its derivatives, the number of which depends on the order of the system. Therefore the system motion is considered in the space of the error coordinate and its derivatives.

In practical applications the use of this approach may prove difficult because of high-order derivatives. Real differentiators are known to have denominators in transfer functions and therefore the system representation in the space of the error and its derivatives may prove inadmissible idealization. The behaviour of variable structure systems with real differentiators was analyzed in Refs [49-51, 93]; in addition, methods reducing the effect of nonidealities by generating sliding modes in the differentiators with variable structure were proposed [54, 55, 94].

The examples given here prove that the most frequent control problems can be solved by using the properties of sliding modes; what is more, there are many other problems that can be solved by the deliberate introduction of sliding motions into systems. A number of papers describe methods for design systems in which the principle of structure variability resulted in technologically necessary constraints on the plant variables [4], in optimal filtering in face of unpredictable changes in the probabilistic characteristics of input signals [45], in improving the control performance by adaptation during the sliding mode [84], in control of interacting systems [83], in plant identification [68], in self-optimizing systems [66], etc. The results of studies in variable structure system theory are systematically described in monographs [34, 45]. Rather complete surveys of contributions to this field are in these monographs and in article [5].

Sec. 2. Conditions of Existence and Mathematical Description of Sliding Modes

The examples of variable structure systems treated in Sec. 1 were special cases because only second order systems were considered with control signals made of the error and its derivatives. These examples were sufficient, however, to ascertain

the usefulness of the deliberate introduction of motions in sliding modes into the system; the first results proved encouraging. Using the sliding modes in systems of a more general form would be still more attractive.

Let us note those features that can be found in such systems in contrast to those described above. Firstly, increasing the order of differential equations, as is usually done for the method of phase space significantly handicaps the analysis of the system behaviour. Secondly, in many cases, in addition to an error, some physical coordinates of the system can be measured which do characterize the system state although they are not error derivatives. This feature should be made use of in the design of the control. A final specific feature inherent in many control systems is that they are multi-input; i.e., the control function is a vector quantity.

Consequently, speaking in a more general terms of using the sliding modes can be used in systems where the control function is designed either with the use of some system coordinates which are generally not the error, or its derivatives. Moreover, the control function can be either scalar or vector. These problems are treated in Refs [6, 7, 63, 66, 83, 100-102, 110-112, 114].

It is now necessary, above all, to clarify the mathematical aspects of such problems. In order to achieve this goal, we turn our attention to a dynamic system of a general type with a discontinuous scalar control described by the equations

$$\dot{x} = f(x,\ t,\ u) \tag{1.8}$$

where x and f are n-dimensional column vectors, u is a scalar function with discontinuities on the surface $s(x) = 0$:

$$u = \begin{cases} u^+(x,\ t) \text{ with } s(x) > 0 \\ u^-(x,\ t) \text{ with } s(x) < 0 \end{cases}$$

$u^+(x,\ t)$, $u^-(x,\ t)$, $s(x)$ are certain continuous functions, $u^+ \neq u^-$. Since we intend to have a sliding mode in the system, a condition must be found in analytical form under which this kind of motion arises on the surface $s = 0$. Earlier in studying second-order systems this problem was derived geometrically: in the neighbourhood of the discontinuity surface the phase trajectories should be directed towards it.

There is a point in introducing a sliding mode into the system only when this kind of motion as a control process has desired

dynamics. This implies that we should be able to write down equations describing motion in sliding mode. In second order systems where the discontinuity surface was specified in the space of the error and its derivative the surface equation is also the sliding equation. Unfortunately, when the equation of discontinuity surface is specified in the space of arbitrary coordinates, generally no equations of sliding mode can be obtained from it. (Now recall that for the second order systems of Sec. 1 the equations of sliding mode were obtained through heuristic considerations rather than in strict terms.)

Thus, the usefulness of employing sliding modes in various control problems cannot be discussed before solving the problems of conditions for the sliding mode to exist and of its mathematical description.

Sliding motions in control systems were the subject of in-depth studies [80, 32] even before the second World War. G. N. Nikol'sky [80] seems to be the first to have published on that topic. Reference [32] is concerned with the problem of obtaining the curves of transient processes for the case when the system uses a constant speed servo and the switching unit has a dead zone.

More detailed studies for general cases were made possible by the development of methods of oscillation theory. State concepts were used to obtain [29] conditions for sliding modes to exist for linear systems with scalar control. These conditions were verified for systems of the general form described by equations (1.8). A sliding mode exists if there are regions of nonzero measure on the surface $s(x) = 0$ where the projections of the vectors $f^+ = f(x, t, u^+)$ and $f^- = f(x, t, u^-)$ on the surface gradient are of the opposite signs and are directed towards the surface (Fig. 5). In analytical form, the conditions of Ref. [29] for a sliding mode to appear can be represented in a form convenient for further discussion and proposed in Ref. [9].

$$\lim_{s \to +0} \dot{s} < 0 \qquad \lim_{s \to -0} \dot{s} > 0 \tag{1.9}$$

Condition (1.9) specifies the region of sliding on a discontinuity surface. Once in this region the describing point is assumed to move inside this region until the boundaries are reached. This motion will be referred to as ideal sliding.

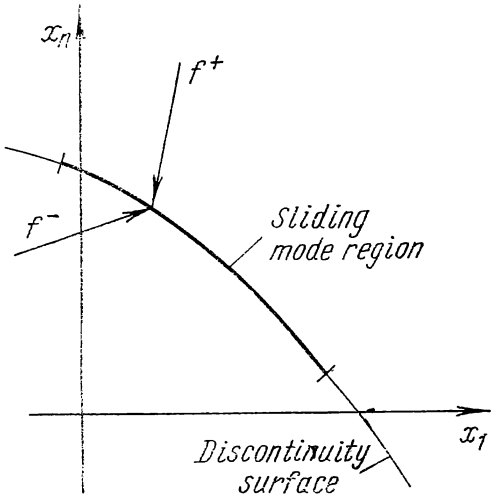

FIG. 5

Now let us discuss the mathematical description of sliding motions. In formal terms equations with discontinuous right-hand side do not satisfy the conventional theorems on the existence and uniqueness of a solution and, furthermore, the right-hand side more often than not is not defined at all. One possible approach to this problem would be axiomatic, which assumes formal continuation of sliding equations. Quite naturally, ambiguity appears and, from an engineer's point of view, supplementary definitions should be selected which permit a correct description of the motions occurring in actual systems.

A. A. Andronov indicated in his works on nonlinear dynamic systems [2, 3] that ambiguity in the system behaviour is eliminated if in the motion equation minor nonidealities are recognized such as delays, small time constants, and hysteresis which result in so-called real sliding in a certain small neighbourhood of the discontinuity surface. Ideal sliding should be regarded as motion limiting process with all the nonidealities tending to zero.

In numerous papers on discontinuous systems, various authors succeeded in obtaining a mathematical description of motion processes; in some cases these equations were postulated and in others they were substantiated by the above limiting process. In all cases, the problem reduces to finding

a certain system of differential equations with continuous right-hand sides which, despite the discontinuity of the control function in the original system do describe motion in sliding mode. In Secs 3 and 4 different ways of continuation of solutions will be given that permit writing formal sliding equations with their applicability boundaries defined for systems with discontinuous scalar control. Then Sec. 5 will treat particular cases of limiting processes requiring introduction of specific nonidealities into the system so as to justify a particular formal continuation of equations for sliding.

Sec. 3. A. F. Filippov's Continuation Method

In the literature the most widely used technique is that of continuation of equations (1.8) proposed by A. F. Filippov [103]. In each point of the discontinuity surface the velocity vector determining the solution belongs to a minimal convex closed set containing all values of $f(x)$ when x covers the entire δ-neighbourhood of the point under consideration (with δ tending to zero) except possibly a zero measure set. The possibility of rejecting a zero measure set permits determining the velocity vector for sliding motions too. Indeed, although in the points on the discontinuity surface, the vector for the system (1.8) is uncertain, these points in an n-dimensional vicinity make a zero measure set and may be disregarded *. For continuation of a solution for ideal sliding (i.e. in systems with scalar control) Filippov's method gives the following result: to determine the velocity of f^0 in sliding mode, in each point of the sliding region the velocity vectors should be plotted for the "upper" and "lower" systems and their ends connected. In this way a minimal convex bull is obtained which is the subject of Filippov's continuation method. Since by definition ideal sliding occurs on the discontinuity surface, the state velocity vector of that motion lies on a plane tangential to the surface and therefore its end is the intersection point of the tangential plane and the straight line connecting the ends of the vectors f^+ and f^- (Fig. 6).

---

* In particular, this kind of continuation is used in Ref. [107] where the stability of systems described by equations with discontinuous right-hand side was studied.

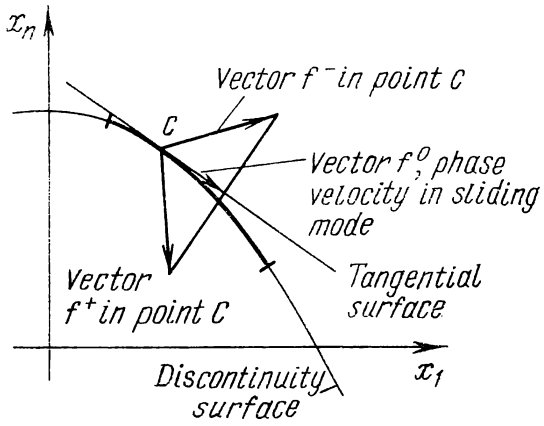

FIG. 6

Thus the ideal sliding equation defined according to Filippov for the system (1.8) is of the form

$$\dot{x} = f^0(x, t)$$

$$f^0 = \mu f^+ + (1 - \mu) f^-$$

$$(0 \leqslant \mu \leqslant 1)$$

where μ is a parameter depending on the directions and magnitudes of the column vectors f^+, f^- and the row vector grad s which is the gradient of the function $s(x)$ *. Computing μ with grad $s \cdot f^0 = 0$ gives the equation

$$\dot{x} = \frac{\operatorname{grad} s \cdot f^-}{\operatorname{grad} s \cdot (f^- - f^+)} f^+ - \frac{\operatorname{grad} s \cdot f^+}{\operatorname{grad} s \cdot (f^- - f^+)} f^- \qquad (1.10)$$

which describes motion in a sliding mode with an additional assumption that the initial conditions for equation (1.10) are selected on the discontinuity surface, or $s(x(0)) = 0$. Filippov proposed that equations (1.10) be regarded as sliding mode equations.

---

* This equation can be rather simply interpreted in physical terms. Assuming that in the vicinity of the discontinuity surface switchings occur rather frequently, Δt_1 and Δt_2 are the times of motions associated with the state velocities f^+ and f^-, respectively, and denoting $\Delta t_1/(\Delta t_1 + \Delta t_2)$ as μ gives that the vector f^0 is equal to the average velocity of that motion.

Sec. 4. Other Continuation Methods

Let us consider now various other continuations of a solution described before Filippov and leading to equations of motions in sliding mode for linear systems.

References [65, 89] studied relay type second-order systems described by the equations

$$\begin{cases} \dot{x}_1 = a_{11}x_1 + a_{12}x_2 \\ \dot{x}_2 = a_{21}x_1 + a_{22}x_2 + u \end{cases}$$

$$u = \begin{cases} M \text{ with } s > 0 \\ -M \text{ with } s < 0, s = cx_1 + x_2 \end{cases}$$

where x_1, x_2 are state variables, a_{ij} $(i, j = 1, 2)$, c, $M = \text{const}$. To obtain an equation for sliding along the straight line $s = 0$, the second equation should be eliminated, the equation $s = 0$ solved for x_2 and the resultant value substituted into the first equation

$$\dot{x}_1 = (a_{11} - a_{12}c)\, x_1$$

The authors noted that in a sliding mode the equation of motion is linearized *.

Reference [29] extended the method of Refs [65, 89] for obtaining sliding equations to linear systems of an arbitrary order in which a discontinuous control function is represented in just one of the motion equations

$$\dot{x} = Ax + bu \tag{1.11}$$

where x is the state vector with components $x_1, \ldots, x_n$, A is a square matrix with constant elements $a_{ij}(i, j = 1, \ldots, n)$, b is a vector with constant elements $b_i = 0\ (i = 1, \ldots, n-1)$, $b_n \neq 0$,

$$u = \begin{cases} 1 \text{ with } s > 0 \\ -1 \text{ with } s < 0 \end{cases}$$

$$s = \sum_{i=1}^{n} c_i x_i, \quad c_i = \text{const}, \quad c_n = 1$$

---

* Note that for the first time the phenomenon of linearizing an element with a discontinuous response was studied in detail in Ref. [69] where a switching mode for that element was created artificially by introducing a high frequency signal from an outside source at its output.

In this case the latter equation in (1.11) is eliminated and the solution of the equation $s = 0$ for x_n is substituted into the first $(n - 1)$ equations

$$\dot{x}_i = \sum_{j=1}^{n-1} (a_{ij} - c_j a_{in})\, x_j \quad (i = 1, \ldots, n-1) \tag{1.12}$$

The linear system (1.12) resulting from this procedure is assumed to be sliding equation.

Reference [78] describes a sequence leading to sliding equations for the case where the elements of the vector b other than b_n can be nonzero. The coordinates u and s of the system (1.11) are regarded as an input and an output and the weighting function of that system $\varphi(t - \tau)$ is assumed to be known. Then the system's response to an arbitrary input action $u(t)$ is of the form

$$s(t) = s_0(t) + \int_0^t \dot{\varphi}(t - \tau)\, u(\tau)\, d\tau \tag{1.13}$$

where $s_0(t)$ is a time function dependent on the initial conditions and $s_0(0) = 0$. The author proposed to use equations resulting from substitution of the solution of the integral equation

$$s_0(t) + \int_0^t \dot{\varphi}(t - \tau)\, u(\tau)\, d\tau = 0$$

for $u(t)$ into the initial system (1.11) as sliding equations.

Still another method leading to sliding equations requires replacement of an element with a discontinuous response by a linear element with an infinite gain [105]. The sliding equations are those resulting from substituting into the original system (1.11) of a linear function ks ($k = \text{const}$) rather than the control u, and then making tend to infinity.

In this Section, we limit ourselves to describing the mathematical procedures for obtaining sliding equations and deliberately leave out their comparison. This aspect will be treated later in Part I where limiting processes will be used to show that in discontinuous systems linear with respect to control

(which is the case of the system (1.11)) the sliding equations should coincide no matter what continuation technique is used.

Sec. 5. Limiting Processes for Substantiation of Sliding Equations

All the above methods of obtaining sliding equations were axiomatic; to verify their legitimacy in studies of actual control systems, limiting processes should be used that are mentioned in Sec. 2. To eliminate ambiguity of the system behaviour on the discontinuity boundary, various nonidealities should be recognized that are ever present and result in a real sliding mode. Equations for ideal sliding may be obtained when the nonidealities tend to zero.

Let us discuss three separate kinds of nonidealities and show that if each is introduced into the system (1.8) and later made to tend to zero this leads to the same equations that result from Filippov's method. This may be one of the reasons for the wide use of Filippov's continuation in studies of control systems with discontinuous controls.

A reservation should be made that all subsequent discussion will be of a qualitative nature. The essence of limiting processes is in determining the mean velocity of the describing point in the vicinity of a certain point on the discontinuity surface and in employing a limiting process which implies that this vicinity tends to zero. In a sufficiently small vicinity of the point the velocity vectors and the gradient of the discontinuity surface will be assumed constant. This will be a non-stringent element in the subsequent considerations.

(a) **A Hysteresis.** Assume that the switch which performs a stepwise change of the control quantity has a hysteresis. Then the function u in equation (1.8) will be of the form

$$u = \begin{cases} u^+(x, t) \text{ with } s(x) > \Delta \\ u^-(x, t) \text{ with } s(x) < -\Delta \ (\Delta = \text{const}) \end{cases}$$

and in the region $|s(x)| \leqslant \Delta$ the function u will maintain the value it had when $|s|$ was for the last time equal to Δ.

In an ideal system (with $\Delta = 0$), the sliding mode condition (1.9) is still assumed to hold, which implies that in the vicinity of the discontinuity surface $s(x) = 0$ the state trajectories are

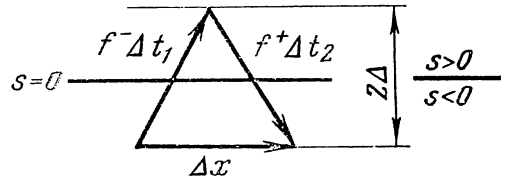

FIG. 7

directed towards this surface. The hysteresis is responsible for the fact that once it hits the discontinuity surface the describing point does not move exactly along the surface but will oscillate in its vicinity of width 2Δ (Fig. 7). To determine the average velocity associated with that motion find first the shifts of the describing point, Δx, over two neighbouring intervals; in one u is equal to u^- and in the other to u^+

$$\Delta x = f^- \Delta t_1 + f^+ \Delta t_2 \tag{1.14}$$

where Δt_1 and Δt_2 are the durations of the intervals and are found from the relations

$$\Delta t_1 = \frac{2\Delta}{\text{grad } s \cdot f^-}, \quad \Delta t_2 = -\frac{2\Delta}{\text{grad } s \cdot f^+} \tag{1.15}$$

Equations (1.14) and (1.15) determine the mean velocity

$$f^0 = \frac{\text{grad } s \cdot f^-}{\text{grad } s \cdot (f^- - f^+)} f^+ - \frac{\text{grad } s \cdot f^+}{\text{grad } s \cdot (f^- - f^+)} f^- \tag{1.16}$$

From comparison of (1.10) and (1.16) it follows directly that the state velocity vector thus computed coincides with the one obtained by Filippov's method.

(b) **A Delay.** Assume that the control has discontinuities not at the time when the sign of s changes but with a certain delay τ. In such a system the describing point which moves, for instance, from the region $s < 0$, reaches the discontinuity surface $s = 0$ (point *1* in Fig. 8) and continues moving during the time τ along the trajectory associated with the control u equal to u^- (or $f = f^-$). At time τ (point *2*) the control switches from u^- to u^+ and during Δt_1 the describing point moves at a rate of f^+ to the discontinuity surface $s = 0$ (point *3*); the switch from u^+ to u^- occurs after a time period τ (in point *4*). Following this a motion with a state velocity of f^- starts which after a period of Δt_2 results in hitting the discontinuity surface

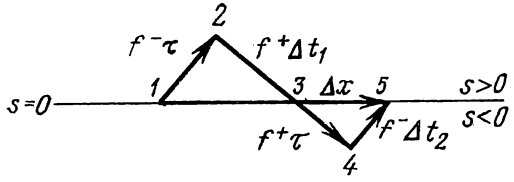

FIG. 8

(in point 5). To determine the mean velocity, compute the shift Δx (vector 1-5 in Fig. 8) and the intervals Δt_1 and Δt_2

$$\Delta x = f^-\tau + f^+\Delta t_1 + f^+\tau + f^-\Delta t_2$$

$$\Delta t_1 = -\frac{\text{grad } s\cdot f^-}{\text{grad } s\cdot f^+}\tau$$

$$\Delta t_2 = -\frac{\text{grad } s\cdot f^+}{\text{grad } s\cdot f^-}\tau$$

The resultant values determine the mean velocity

$$f^0 = \frac{\Delta x}{2\tau + \Delta t_1 + \Delta t_2}:$$

$$f^0 = \frac{\text{grad } s\cdot f^-}{\text{grad } s\cdot(f^- - f^+)}f^+ - \frac{\text{grad } s\cdot f^+}{\text{grad } s\cdot(f^- - f^+)}f^- \qquad (1.17)$$

As follows from comparison of (1.10) and (1.17), the resultant equation is equivalent to that obtained by Filippov's method.

It should be noted that in both cases the results equivalent to those of Filippov's method were essentially obtained without a limiting process which assumes that the width of the hysteresis loop 2Δ in the first case and τ in the second case tends to zero. But this limiting process is implicitly contained in the assumption that the vectors of f^+, f^- and grad s are constant because this condition is valid only in the extreme case where the deflections from the point under consideration tend to zero*. Neatly performed limiting processes for nonidealities of the hysteresis and delay type are given in Refs [108, 109].

(c) **Dynamic Nonidealities.** In many cases a sliding mode can exist in a certain finite vicinity of the discontinuity surface because the ideal model (1.8) disregards the small time con-

* Of course, with rather general constraints on the functions f^+, f^- and s.

stants of servomechanisms, sensors and data processors and, furthermore, in studying actual systems the plant is often approximately represented by a lower order model. Although they do not distort the static responses of the system and are sufficiently small (i.e. the associated motions are much faster than motions in an ideal model), these nonidealities make their influence felt when a sliding mode starts which has a high rate of control signal switching.

Assume for simplicity that the discontinuity surface in the system (1.8) is linear and the control is of a relay type

$$s = cx \tag{1.18}$$

where c is a $1 \times n$ row vector with constant elements, $u^+ = M$, $u^- = -M$ ($M = \text{const}$). Let also the elements with small time constants disregarded in the ideal model (1.8) be linear and be in the measurement channels of the components of the vector x that are necessary for the discontinuity surface to form. This implies that the entire system contains a certain additional dynamic subsystem whose state is characterized by a certain output state vector y (e.g. of dimensionality m) with a vector x at the input

$$\tau\dot{y} = Ay + Hx \tag{1.19}$$

where A and H are constant $m \times m$ and $m \times n$ matrices, eigenvalues of the matrix A have negative real parts, τ is a sufficiently small positive value which sets the "rate of motion" of an additional dynamic system. A vector x in the control (1.18) will be replaced by a certain n-dimensional vector x^* made of all or some of the components of the vector y due to nonidealities of measurement:

$$x^* = Ry \tag{1.20}$$

where R is a constant $n \times m$ matrix and therefore the equation for the discontinuity surface will be

$$s^* = 0, \; s^* = cx^* \tag{1.21}$$

rather than (1.18). We are dealing with nonidealities of the dynamic type alone and, consequently, in static condition the vector x should be measured without distortions. From (1.19)-(1.21) we have a condition of equality of the vectors x and x^*

in static mode which should be satisfied by the matrices A, H and R

$$-RA^{-1}H = I_n, \; I_n \text{ is an identity matrix} \tag{1.22}$$

(the matrix A^{-1} does exist since the matrix A has no zero eigenvalues). The behaviour of the system is thus described by equations (1.19)-(1.22) with the equation

$$\dot{x} = a + bu^*, \; u^* = \begin{cases} 1 \text{ with } s^* > 0 \\ -1 \text{ with } s^* < 0 \end{cases} \tag{1.23}$$

where $a = \frac{1}{2}(f^+ + f^-)$, $b = \frac{1}{2}(f^+ - f^-)$. The vectors a and b will be regarded as constant as was done in studying systems with a hysteresis and delay.

In the case where the system has no dynamic nonidealities, or $\tau = 0$ and $s^* = cx$, from the condition (1.9) and the equation

$$\dot{s}^* = ca + cbu^*$$

follows the condition for a sliding mode to exist in the ideal system (1.8) or its equivalent (1.23)

$$cb < 0, \; |cb| > |ca| \tag{1.24}$$

Introduction of dynamic nonidealities into the system (whereby in (1.19) τ is nonzero) eliminates ambiguity in the behaviour of the system at the discontinuity boundary $s^* = 0$, because in this case $\dot{s}^*$ becomes continuous and no sliding mode can start. Now let us show that under the condition (1.24) and with τ tending to zero the equations for a system recognizing dynamic nonidealities coincide with those resulting from the application of Filippov's method to an ideal system. This contention will be proved by the describing function method (in the framework of the assumptions made in the method).

Assume that u^* and s^* are the input and output signals in the system and write an equation of the motion with respect to these coordinates in terms of Laplace transforms and eliminating intermediate variables from (1.19)-(1.21), (1.23)

$$s^*(p) = cR(\tau p - A)^{-1}\left[H\frac{a}{p^2} + H\frac{b}{p}u^*(p) + Hx(0) + \tau y(0)\right] \tag{1.25}$$

where $x(0)$, $\dot{y}(0)$ are the initial conditions. In compliance with the procedure of the describing function method, a solution of equation (1.25) for s^* will be sought in the form

$$s^* = \lambda_0 + \lambda_1 \sin \omega t$$

where $\lambda_0, \lambda_1, \omega = \text{const}$, and in the function $u^* = \text{sign } s^*$, only the constant component u_0^* and the first harmonic $u_1^* \sin \omega t$ of the expansion in a Fourier series will be recognized

$$u_0^* = \frac{2}{\pi} \arcsin \frac{\lambda_0}{\lambda_1} \tag{1.26}$$

$$u_1^* = \frac{4}{\pi} \sqrt{1 - \left(\frac{\lambda_0}{\lambda_1}\right)^2} \tag{1.27}$$

Substituting the transforms s* and u^* into (1.25) gives an identity which yields the desired coefficients λ_0, λ_1 or u_0^*, u_1^*. Following the expansion into elementary fractions and equating, in the light of the condition (1.22), the coefficient of the fraction $1/p^2$ to zero determine the constant component of he control function

$$u_0^* = -\frac{ca}{cb} \tag{1.28}$$

and from (1.26)-(1.28) the amplitude of the first harmonic

$$u_1^* = \frac{4}{\pi} \cos\left(\frac{\pi}{2} \frac{ca}{cb}\right) \tag{1.29}$$

(Note that the constant component of the function $u^* = \text{sign } s^*$ cannot be larger than unity which is true according to (1.24) and (1.28). Finally, to find the frecquency, use the equation for the balance of phases of the first harmonics in input and output signals

$$\arg cR(\tau j\omega I_n - A)^{-1} H \frac{b}{j\omega} = \pm k\pi$$

or

$$\arg cR(j\omega I_n - A)^{-1} Hb = \frac{\pi}{2} \pm k\pi, \quad k = 0, 1, 2, \ldots \tag{1.30}$$

where $\bar{\omega} = \tau\omega$. Assume that in the fractional function $cR(\tau p I_n - A)^{-1} Hb$ the power of the denominator is larger than that

of the numerator by at least two. Then equation (1.30) always has a solution for $\bar{\omega}$, to be denoted as ω_0, independent of τ and therefore the frequency of the first harmonic ω is found with the condition*

$$\omega = \frac{\omega_0}{\tau} \tag{1.31}$$

Consequently, in the presence of dynamic nonidealities the behaviour of the system (1.23) is, by virtue of (1.28), (1.29) (1.31), approximately described by the equation

$$\dot{x} = a - b\frac{ca}{cb} + b\left(\frac{4}{\pi}\cos\frac{\pi}{2}\frac{ca}{cb}\right)\sin\frac{\omega_0}{\tau}t \tag{1.32}$$

With τ characterizing the additional dynamic system diminishing, the frequency of the periodic component will increase and, as follows from (1.32) its effect on the motion in the system will reduce. This implies that the solution of the system (1.32) with τ tending to zero will be the same as for the extreme case of

$$\dot{x} = a - b\frac{ca}{cb} \tag{1.33}$$

Substituting their values $1/2\,(f^+ + f^-)$, $1/2\,(f^+ - f^-)$ and grad s for a, b and c into (1.33) we have after transformations,

$$\dot{x} = \frac{\text{grad } s \cdot f^-}{\text{grad } s \cdot (f^- - f^+)} f^+ - \frac{\text{grad } s \cdot f^+}{\text{grad } s \cdot (f^- - f^+)} f^- \tag{1.34}$$

As follows from comparison of (1.10) and (1.34), if dynamic nonidealities are introduced into the system and then tend to zero, the resultant equations also coincide with Filippov's continuation equations.

Sec. 6. Problems in the Theory of Sliding Modes for Systems with Discontinuous Control

We have thus far found that, on the one hand, sliding modes are very promising in the design of control systems and, on the other, that studies of the behaviour of discontinuous systems

* The stability of these harmonic oscillations may be proved by using the criterion for stability of limit cycles developed in the describing function method.

require a special mathematical tool because the methods of conventional theory of differential equations are inapplicable. Mathematically the solution of a system on the discontinuity boundary can be continued but this approach cannot be accepted without reservations for actual systems because any kind of continuation should be legitimized physically. It is our view that continuation combined with its substantiation in terms of limiting processes rather than continuation alone is the core of the problem of describing the behaviour of discontinuous systems. Limiting processes eliminate ambiguity in behaviour on discontinuity surfaces and make it possible to compare different ways of solution continuation.

In most cases, however, limiting processes have been performed only for specific kinds of nonidealities such as hysteresis or a delay [2, 23, 78, 108, 109] or, as was done in Sec. 5, for dynamic nonidealities. Therefore the behaviour of a system with nonidealities of an arbitrary nature and the scopes of any continuation of sliding equations remain open questions.

Unlike the scalar cases, discussed earlier, vector cases can emerge in discontinuous systems when control is a vector quantity and each of its components has discontinuities on the appropriate surface. In such cases once on the intersection of discontinuity surfaces the describing point returns to that manifold should any small reflections occur. (For instance, if at each discontinuity surface the condition (1.9) of a sliding mode intended for the scalar case exists.) This signifies that further motion will occur along the intersection of the discontinuity surface. This motion will also be referred to as ideal sliding. The possibility that this more complicated kind of motion may appear gives rise to a set of problem statements more general than in the scalar case. Firstly, it is necessary to obtain, in analytical form, the conditions for a sliding mode to exist on the intersection of several surfaces rather than on a single surface. Another problem is development of formal methods, or continuation, leading to equations of sliding along the intersection manifold. Finally, these methods should be proved with the use of limiting processes such that would not require introduction of any particular kinds of nonidealities. The latter problem formulated in this Section evidently incorporates the behaviour of a system with scalar control and nonidealities of an arbitrary nature.

Part I will be devoted to mathematical tools for the study of discontinuous systems with either scalar or vector control which are expected to result from solution of the above problems.

Part I will describe a formal way to obtain sliding modes both in the scalar and in the vector cases and will isolate a class of systems for which the legitimacy of this approach is confirmed by the introduction of nonidealities of an arbitrary nature and of a subsequent limit process procedures. Cases will be indicated where sliding equations cannot be obtained in an unambiguous way and reasons for this ambiguity are revealed. The problem of the existence of a sliding mode for vector cases is solved with the use of the Lyapunov's second method. The methods of studying discontinuous systems described in Part I may be used for studying the properties of sliding modes and subsequently, for designing control systems where the desired dynamic performance can be obtained by deliberate creation of this kind of motion. Possible approaches to the design of systems of this kind are also discussed in Part I.

As already noted in Sec. 2, the design may imply that the control is a function of arbitrary coordinates of the system (not only of the coordinates of the error and its derivatives as has been done in most cases where the properties of sliding modes were used) and the control itself may be a vector as well as a scalar quantity. The solution methods for the most frequent control problems with deliberate generation of sliding modes in the class of variable structure systems will be discussed in Parts II and III.

Part II will be concerned with various design problems for linear plants with a scalar control. Cases are treated separately where the plant parameters are constant and where they vary with time, and also cases where the motion to be controlled is free and forced (in the presence of disturbances).

Part III will discuss extensions to systems with vector control. Problems of high performance control are, as in the scalar case, solved in the class of variable structure systems and the design methods require sliding modes over the intersections of discontinuity surfaces. Part III describes conditions under which sliding motions are invariant with respect to external disturbances and varying plant characteristics. Sliding modes also are used in solving various problems of static optimization and identification for dynamic plants.

Part I

SOME ASPECTS OF SLIDING MODE THEORY

This part will discuss dynamic systems described by differential equations with discontinuous right-hand sides. The motion equations are discontinuous because of the presence of a scalar or vector parameter, to be referred to henceforth as the control function, whose components undergo discontinuities on certain surfaces specified in the system space coordinates. The motion equations of such systems usually describe motion outside the discontinuity surfaces and are not defined over the surfaces themselves. As noted in the Introduction, a sliding mode can appear in such systems; in this motion the trajectory of the describing point cannot leave any, no matter how small, neighbourhood of some surface or the intersection of several surfaces. In Chapter II physical considerations will yield cases where equations for the motion outside the discontinuity surface unambiguously lead to equations for the motion along their intersection in a sliding mode and various situations where no such unambiguity can take place are discussed.

In Ch. III Lyapunov's definition of stability is used in the definition of a sliding mode and conditions for the latter's existence in various vector cases are given. The need in this kind of study is caused by the fact that in the vector case the conditions for a sliding mode to exist are not so evident as in the scalar case. (Recall that in the scalar case these conditions had a transparent geometric interpretation: state trajectories in the vicinity of the discontinuity surface are directed towards it.)

The research techniques to be described in Chapters II and III will be applied to design of control systems with desired performance by deliberate introduction of sliding motions into the system.

Chapter II

EQUATIONS OF SLIDING MODES IN DISCONTINUOUS SYSTEMS

Sec. 1. Statement of the Problem. The Equivalent Control Method

Let us consider a vector case of a discontinuous dynamic system described by the equations

$$\dot{x} = f(x, t, u) \tag{2.1}$$

In this equation x and f are n-dimensional column vectors with components $x_1, \ldots, x_n$ and $f_1, \ldots, f_n$ respectively; x_i are coordinates of the system, f_i are continuous functions of all the arguments; u is an m-dimensional column vector to be referred to hereafter as a control function whose each component u_i has discontinuities on the surface $s_i(x)\, s = 0$:

$$u_i = \begin{cases} u_i^+(x, t) & \text{with } s_i(x) > 0 \\ u_i^-(x, t) & \text{with } s_i(x) < 0 \end{cases} \quad (i = 1, \ldots, m)$$

where $u_i^+(x, t)$, $u_i^-(x, t)$ and $s_i(x)$ are certain continuous functions of $(u_i^+ \neq u_i^-)$*.

These motion equations determine the behaviour of the system outside the discontinuity boundaries and generally leave the question, what would happen after the describing point reduces these boundaries, unanswered. Under the initial conditions on the intersection of discontinuity surfaces the further trajectory may be found to stay over a certain finite time interval within any infinitesimal vicinity of that intersection. In parti-

---

* All subsequent reasoning is equally applicable to nonstationary discontinuity surfaces whose equations, $s_i(x, t) = 0$, are explicitly dependent on time. This case is reducible to the cases treated in this Sec. and below by the introduction of a new variable $x_{n+1} = t$ and completing the system (2.1) with the equation $\frac{dx_{n+1}}{dt} = 1$.

cular, for the scalar case this motion, which has been termed ideal sliding, occurs when the state trajectories in the vicinity of the discontinuity surface are directed towards it (Fig. 5).

What is required is to reasonably specify the equation of ideal sliding in terms of equations for the motion outside the discontinuity surfaces and of the equations of the surfaces themselves. Formally any ways of continuation of solutions are admissible that lead to a description of motion in sliding mode. (These methods are briefly surveyed and analyzed in the Introduction.)

In further discussion, sliding equations will be specified by a formal tool referred to as the equivalent control method. Time derivatives of the functions $s_i(x)$ determined by virtue of (2.1) are equated to zero and the resultant equation system is solved for the components of the control vector; the solution, termed the equivalent control, is substituted into the original system (2.1) and the equations thus obtained are used as equations of ideal sliding.

To decide which method of specifying the equations for ideal sliding should be preferred *, the following reasoning seems the soundest. The equations are uncertain for the simple reason that in the original equations, in particular in (2.1), various small nonidealities were neglected which, however, make all the difference between the actual system and its idealized description. These nonidealities, such as delays, hysteresis, small time constants, etc., should be brought into consideration in the motion equations and then the nonidealities should be made to approach zero. The nonidealities result in a motion in the vicinity of a discontinuity surface ("real sliding") that is completely determined and this motion with the nonidealities tending to zero becomes "ideal sliding". If different nonidealities or different limiting processes resulted in different equations, it would be natural to believe that there is no singular solution to the problem of solution continuation for ideal sliding equations with the equations describing the system outside the discontinuity surfaces given. But if such a limiting process can be performed with any type of nonidealities or if it may be proved that any nonidealities of a certain class lead

* We will see below that Filippov's method and the equivalent control method may lead to different sliding equations.

to the same limit equations, it would be resonable to regard them as a correct description of the ideal sliding.

In terms of this reasoning Filippov's method was substantiated only for the scalar case and only with the use of limiting processes for particular cases of nonidealities *. The same nonidealities were used in Refs [23, 78] to substantiate other ways to continue solutions of discontinuous systems. Therefore, the validity of different specification procedures (in particular, of Filippov's procedure) should be assured even in the scalar case for other kinds of nonidealities.

As for the vector case, the author is unaware of any papers using procedures which would explicitly lead to equations of a sliding mode in the discontinuity surfaces **.

In Sec. 2 first a vector case is treated where a discontinuous system is linear with respect to control. It will be shown that with any nonidealities introduced into the system and ways of making them tend to zero available, the above limiting processes always lead to equations which determine the motion in sliding mode unambiguously and coincide with the equations resulting from formal application of the equivalent control method.

Then Section 3 will treat a scalar case of a system nonlinear with respect to control and the equations of ideal sliding are shown to differ depending on the type of nonidealities. A class of nonidealities is found for which artificial linearization is possible and hence the use of the equivalent control method is legitimized as a tool to obtain sliding equations. The sensitivity of limiting processes to small parameters is discussed; these characterize the ever present and unaccounted for small delays, time constants, etc.

---

* In one of them, a hysteresis loop was assumed, a small delay in another and a small time constant in the third and all of them were made to go to zero, see Ch. 1.

** Filippov's method was originally developed for the scalar case. It was noted in [104] that the vector case can be treated in the same way, but this was not confirmed by any limiting processes. It would be appropriate to note here that procedures similar to the equivalent control method have been applied without substantiation with limiting processes to the vector case in variable structure systems [100, 110] and to the scalar case [90]; a particular case of a discontinuous system with scalar control has been substantiated in [23].

Then Chapter II considers vector cases of discontinuous systems of a general form nonlinear with respect to control. In such systems even for a fixed type of nonidealities various sliding mode equations may hold depending on the way of making them go to zero.

Section 4 describes a class of nonlinear systems and a class of nonidealities for which, as in the scalar case, artificial linearization is possible which unambiguously yields sliding equations.

Section 5 is a detailed treatment of singular cases of systems linear with respect to vector control. Depending on the nature of singularity, the sliding equation can be determined either unambiguously or ambiguously, otherwise no sliding mode can occur in the system.

In conclusion, Section 6 shows the physical meaning of the equivalent control needed to define sliding equations.

Sec. 2. Systems Linear with Respect to Control

Let us consider a particular case of the system (2.1) where it depends on vector control linearly, or the system is represented by the equation:

$$\dot{x} = f(x, t) + B(x, t)\, u \tag{2.2}$$

where x and f are n-dimensional column vectors, $B(x, t)$ is an $n \times m$ matrix, u is an m-dimensional control vector whose each component has discontinuities on a proper surface specified by the equation $s_i(x) = 0$ *

$$u_i(x, t) = \begin{cases} u_i^+(x, t) \text{ with } s_i(x) > 0 \\ u_i^-(x, t) \text{ with } s_i(x) < 0 \end{cases} \tag{2.3}$$

It is assumed that the functions $f(x, t)$ and $B(x, t)\, u$ satisfy the Lipschitz condition outside the discontinuity surface. In such systems, sliding motions can occur which, unlike the scalar case, stay on the intersection of discontinuity surfaces rather than on a single discontinuity surface. For the time being, leaving aside the question under what conditions does such motion exist, let us formally apply the equivalent control

* The class of admissible functions $s_i(x)$ will be described below in studying the equations of sliding mode along the intersection of discontinuity surfaces.

method of Sec. 1 of this chapter to obtain equations of sliding motion in this vector case.

Introduce an m-dimensional vector $s = (s_1, \ldots, s_m)$. The value of u_{eq} is found from the equation $s = 0$ which by virtue of the system (2.2) is of the form

$$Gf + GBu_{eq} = 0 \tag{2.4}$$

where G is an $m \times n$ matrix whose rows are the gradient vectors of the functions $s_i(x)$. Assuming that $\det GB \neq 0$ for any x and t, we have

$$u_{eq} = -(GB)^{-1} Gf \tag{2.5}$$

Substitution of u_{eq} into the initial equation gives

$$\dot{x} = f - B(GB)^{-1} Gf \tag{2.6}$$

which under the initial conditions $s(x(0)) = 0$ is assumed to be the equation of ideal sliding. What is important is that the method implies $\dot{s}(x) \equiv 0$ and under the selected initial conditions all trajectories of the system (2.6) stay on the $(n - m)$-dimensional manifold of the intersection of all discontinuity surfaces. Therefore instead of the n-th order system (2.6), we can write an $(n - m)$-th order equation set for sliding. Let us describe the procedure of obtaining such a system. Since in a sliding mode s is identically zero, a system of m algebraic equations $s = 0$ leads to some m coordinates as functions of the remaining $n - m$ coordinates. According to the implicit function theorem such coordinates, e.g. $x_{n-m+1}, \ldots, x_n$, are always there if the rank of the matrix G made of gradients of the functions $s_i(x)$ is equal to m. This condition holds because for the system which we have examined $\det GB \neq 0$. Substitute in the first $n - m$ equations of the system (2.6) the coordinates $x_{n-m+1}, \ldots, x_n$ computed in this way and reject the remaining ones. The resultant $(n - m)$-th order system describes motion in sliding mode.

To bear out the validity of the sliding equations thus obtained, it is necessary to arrange in compliance with the reasoning of Sec. 1, an appropriate limiting process which requires introduction of nonidealities into the system that will later tend to zero. The presence of nonidealities of any nature in the system will result in a so-called real sliding mode during which, unlike

ideal sliding, the state trajectories belong to a certain finite Δ-vicinity of the manifold $s(x) = 0$, or

$$\| s(x) \| \leqslant \Delta, \quad \| s \| = \sqrt{\sum_{i=1}^{m} s_i^2} \tag{2.7}$$

Let us assume that $r(s, x)$, the distance between any point of the neighbourhood (2.7) and the manifold $s(x) = 0$ is estimated by the inequality

$$r(s, x) \leqslant P\Delta \tag{2.7a}$$

where P is a certain positive number *. In this case the motion of the system will be described by an equation other than the original (2.2)

$$\dot{x} = f(x, t) + B(x, t)\,\tilde{u}(x, t) \tag{2.8}$$

where the control $\tilde{u}$ incorporates nonidealities of any kind and it is only known that it makes equation (2.7) valid. Besides, a solution of the system (2.8) is assumed to exist (for instance, the function $B(x, t)\,\tilde{u}$ satisfies the Lipschitz condition or is piecewise-continuous and bounded). The latter assumption is natural since the nonidealities which usually do exist in actual systems, do not invalidate this hypothesis. Together with the inequality (2.7) equation (2.8) specifies a set of dynamic systems because it may be found that for an entire class of control functions $\tilde{u}$ the state trajectories belong to a Δ-neighbourhood of the manifold $s(x) = 0$. The proof of the fact that with Δ tending to zero the solution of all these systems tends to the same function would mean that sliding mode equations can be found unambiguously.

Theorem. *If*

(1) *on the interval* $[0, T]$ *any solution* $x(t)$ *of system* (2.8) *is such that the state trajectory is in the* Δ*-neighbourhood of the manifold* $s(x) = 0$, *or the inequality* (2.7) *is valid;*

(2) *for the right-hand side of equation* (2.6) *obtained by using the equivalent control method*

$$x^* = f(x^*, t) - B(x^*, t)\,[G(x^*)\,B(x^*, t)]^{-1} G(x^*)\,f(x^*, t)^{**} \tag{2.9}$$

a Lipschitz constant L *exists;*

---

* Such P exists, for instance, if all norms of gradients of the function $s_i(x)$ are greater than some constant positive value.

** To distinguish the solutions of the systems (2.8) and (2.9) the state vector in (2.9) is denoted as x^*.

(3) *partial derivatives of the function* $B(x, t)\ [G(x) \cdot B(x, t)]^{-1}$ *with respect to all arguments exist and are bounded in any bounded domain*;

(4) *for the function* $f(x, t) + B(x, t)\ \tilde{u}$ *which is in the right-hand side of real sliding equation* (2.8), *there exist positive quantities* M *and* N *such that*

$$\| f(x, t) + B(x, t)\, \tilde{u}(x, t) \| \leqslant M + N \| x \| \tag{2.10}$$

then for any pair of solutions to equations (2.8) *and* (2.9) *under the initial conditions*

$$\| x(0) - x^*(0) \| \leqslant P\Delta \tag{2.11}$$

there exists a positive quantity H *such that*

$$\| x(t) - x^*(t) \| \leqslant H\Delta \text{ with } t \in [0, T] \tag{2.12}$$

To prove the theorem, the difference of solutions to equations describing motion in ideal and real sliding modes should be estimated with respect to the norm. For a real sliding mode $\dot{s}$ is not zero any more as was assumed in the equivalent control method. Therefore, the control $\tilde{u}$ defined by virtue of the system (2.8) will be different from u_{eq}:

$$\tilde{u} = -(GB)^{-1} Gf + (GB)^{-1} \dot{s}$$

and consequently the equation for a real sliding mode obtained by substituting $\tilde{u}$ into (2.8)

$$\dot{x} = f(x, t) - B(x, t)\, [G(x)\, B(x, t)]^{-1}\, G(x) f(x, t) + \\ + B(x, t)\, [G(x)\, B(x, t)]^{-1}\, \dot{s} \tag{2.13}$$

is also different from equation (2.6) or (2.9) in the additional term $B(x, t)\ [G(x)\, B(x, t)]^{-1} \dot{s}$. Equation (2.13) certainly represents all nonidealities recognized in control because the value of $\dot{s}$ depends on them. Equation (2.13) describes real sliding motions with due regard for all nonspecified nonidealities and with Δ tending to zero its solution describes an ideal sliding. (It should be remembered that with Δ going to zero $\dot{s}$ does not necessarily go to zero).

Before comparing the solutions of equations (2.6) and (2.13), let us write their equivalent integral equations

$$x^*(t) = x^*(0) + \int_0^t \{ f(x^*, \gamma) - B(x^*, \gamma)\,[G(x^*)\,B(x^*, \gamma)]^{-1} \times$$

$$\times\, G(x^*) f(x^*, \gamma) \}\, d\gamma \qquad (2.6a)$$

$$x(t) = x(0) + \int_0^t \{ f(x, \gamma) - B(x, \gamma)\,[G(x)\,B(x, \gamma)]^{-1} \times$$

$$\times\, G(x) f(x, \gamma) \}\, d\gamma + \int_0^t B(x, \gamma)\,[G(x)\,B(x, \gamma)]^{-1}\, \dot{s}\, d\gamma \qquad (2.13a)$$

Integrating the last addend in (2.13a) by parts, estimate the norm of the difference between the solutions to (2.13a) and (2.6a) with due regard for the Theorem conditions

$$\| x(t) - x^*(t) \| \leqslant P\Delta + \int_0^t L \| x - x^* \|\, d\gamma +$$

$$+ \| B(x, \gamma)\,[G(x)\,B(x, \gamma)]^{-1} s \| \int_0^t + \qquad (2.14)$$

$$+ \int_0^t \| \frac{d}{d\gamma} B(x, \gamma)\,[G(x)\,B(x, \gamma)]^{-1} \| \cdot \| s \|\, d\gamma$$

The solution to equation (2.13a) or its equivalent (2.8) is bounded on a finite time interval $[0, T]$. This follows from the fact that with condition (2.10) true the solution to equation (2.8) satisfies the inequality

$$\| x(t) \| \leqslant \| x(0) \| + MT + \int_0^T N \| x \|\, dt$$

According to the Bellman-Gronwall lemma, this very inequality makes the solution to (2.8) or (2.13a) bounded

$$\| x(t) \| \leqslant (\| x(0) \| + MT)\, e^{NT} \quad (t \in [0, T])$$

Then by virtue of the fact that solution to $x(t)$ is bounded and by virtue of items (1)-(3) of the Theorem, the inequality (2.14) can be represented as

$$\| x(t) - x^*(t) \| \leqslant S\Delta + L \int_0^t \| x - x^* \| d\gamma \qquad (2.15)$$

where S is a positive value depending on the form of the functions in the right-hand sides of equations (2.8) and (2.13), on the initial conditions, time T and the constant P. Applying the Bellman-Gronwall lemma to the inequality (2.15) yields

$$\| x(t) - x^*(t) \| \leqslant H\Delta \quad (t \in [0, T])$$

where $H = Se^{LT}$, which proves the theorem.

The theorem implies that with the initial conditions of the systems (2.8) and (2.9) sufficiently close, their solutions are also close. Since equation (2.9) describes an ideal sliding along the intersection of discontinuity surfaces and equation (2.8) describes a real sliding mode in the vicinity of that intersection (i.e. $s(x^*(0)) = 0$ and $s(x(0)) \leqslant \Delta$), the value of $\| x(0) - x^*(0) \|$ is the distance from the point $x(0)$ to some point on the manifold $s = 0$. By virtue of the assumption (2.7a) on the functions $s_i(x)$ for any point $x(0)$ one can always find a point $x^*(0)$ in the manifold $s = 0$ such that the condition (2.11) holds. Consequently, by virtue of (2.12) for any solution to equation (2.8) describing real sliding there is a solution to equation (2.9) (which describes ideal sliding) differing within the range of Δ and over any finite time interval

$$\lim_{\Delta \to 0} x(t) = x^*(t) \qquad (2.16)$$

This result signifies that with any nature of the nonidealities that have generated the real sliding mode in the vicinity of the intersection of the surface of the discontinuity and with whatever way of making this vicinity tend to zero a solution of the nonideal sliding equation (2.8) tends to the solution of equation (2.9) resulting from formal application of the equivalent control

method.* In compliance with the reasoning of Sec. 1 this fact substantiates the validity of the method for obtaining ideal sliding equations. The theorem has been proved for a finite time interval. The complexities of limiting process for an infinite time interval are caused by general properties of solutions of ordinary differential equations rather than by the specifics of our problem.

Let us take up various situations that can arise in trying to extend the limiting process treated here to an infinite time interval. In studying the control systems we are primarily interested in the behaviour of the system over an infinite time interval but this problem can only be stated when the system motion is stable. Assume that for some region of initial conditions any solution of equation (2.9) obtained by the above formal method is exponentially stable with respect to, for instance, a certain equilibrium position x_∞. In this case, the solution of the system (2.8) with initial conditions (2.11) will asymptotically approach a certain vicinity of the point x_∞ whose size is proportional to Δ, the convergence being exponential.

The proof of this assertion proceeds from the fact that any solution of the system (2.9) with a certain region of initial conditions has an exponential upper bound

$$\| x^*(t) - x_\infty \| \leqslant A \| x^*(0) - x_\infty \| e^{-\varkappa t} \tag{2.17}$$

where $A, \varkappa$ are positive constants and, $A \geqslant 1$. For any time T by virtue of (2.12) the estimate

$$\| x(T) - x_\infty \| \leqslant \| x^*(T) - x_\infty \| + H\Delta \tag{2.18}$$

is valid. Select T equal to $\frac{1}{\varkappa} \ln 2A$; then at time T we have

$$\| x^*(T) - x_\infty \| \leqslant \frac{1}{2} \| x^*(0) - x_\infty \|$$

* Physically these considerations may be interpreted as follows. Real sliding modes have a finite frequency at which the components of the control vector are switched. The state velocity vectors of each of the continuous systems are not generally to be found on the manifold of discontinuity surface intersection. Therefore for the describing point to stay in the vicinity of (2.7) with Δ decreasing, the switching frequency should increase. Equation (2.13) treated in the theorem describes a real filter whose response to external disturbances reduces with frequency starting with a certain value of frequency. (This disturbance is the addend $B(GB)^{-1}\dot{s}$ in (2.13) which makes this equation different from ideal sliding equation (2.9).) Therefore the effect of the additional term, caused by nonidealities, is reduced with Δ tending to zero; in other words, these terms do not affect ideal sliding.

The two latter inequalities with $\| x^*(0) - x_\infty \| \leqslant \| x(0) - x_\infty \| + P\Delta$ signify that

$$\| x(T) - x_\infty \| \leqslant \frac{\| x(0) - x_\infty \| + P\Delta}{2} + H\Delta \tag{2.19}$$

Then if the initial conditions in the system (2.8) are such that

$$\| x(0) - x_\infty \| \geqslant \frac{P + 2H}{2\xi - 1} \Delta \tag{2.20}$$

where $\frac{1}{2} < \xi < 1$, $\xi = \text{const}$, then

$$\| x(T) - x_\infty \| \leqslant \xi \| x(0) - x_\infty \|$$

If at time T the inequality (2.20) is found valid, then with the same reasoning and comparing again the solutions of (2.8) and (2.9) with the initial conditions differing within the range of $P\Delta$ it can be proved that

$$\| x(2T) - x_\infty \| \leqslant \xi^2 \| x(0) - x_\infty \|$$

Consequently, at the k-th step (if at the start of all the preceding steps at times $0, T, \ldots, (k-1)T$ the condition (2.20) was found to hold) we have

$$\| x(kT) - x_\infty \| \leqslant \xi^k \| x(0) - x_\infty \|$$

The resultant relation signifies that the solution of the system (2.8) asymptotically tends to the region $\| x - x_\infty \| \leqslant \frac{P + 2H}{2\xi - 1} \Delta$ with the convergence being exponential. The solutions issuing from that region end there at time T as follows from (2.19) and (2.20). Estimate the deflection norm for this solution bearing in mind that the inequality (2.18) is valid over the entire interval $[0, T]$

$$\| x(t) - x_\infty \| \leqslant \| x^*(t) - x_\infty \| + H\Delta \leqslant \| x^*(0) -$$

$$- x_\infty \| A + H\Delta \leqslant (\| x(0) - x_\infty \| + P\Delta) A +$$

$$+ H\Delta \leqslant \left(\frac{P + 2H}{2\xi - 1} \Delta + P\Delta \right) A + H\Delta$$

Since at the end of the interval, the solution still belongs to the region $\| x - x_\infty \| \leqslant \frac{P + 2H}{2\xi - 1} \Delta$, then reaching it at a certain

time t_0 the solution of the system (2.8) over an infinite time interval is estimated by the inequality

$$\| x(t) - x_\infty \| \leqslant R\Delta \text{ with } t_0 \leqslant t < \infty$$

where

$$R = \left(\frac{P + 2H}{2\xi - 1} + P \right) A + H$$

This proves exponential convergence of the solution to the system (2.8) to a small vicinity of the equilibrium position for the system (2.9); this vicinity is defined by the parameter Δ which characterizes the value of various nonidealities of the system.

From these facts, it follows that for systems of this type the solutions of equations (2.8) and (2.9) will be close over an infinite interval starting with a certain time instant.

Let us now consider an important particular case of exponential stability of a solution of an equation obtained by applying the equivalent control method to a linear time-invariant system. The motion of such a system is described by the equation

$$\dot{x} = Ax + Bu + g(t)$$

where A and B are constant $n \times n$ and $n \times m$ matrices, $g(t)$ is a column vector depending only on time and characterizing the external disturbances, the m-dimensional control u varies according to (2.3). Discontinuity surfaces $s_i = 0$ are planes, in other words, the m-dimensional vector s is represented in the form

$$s = Cx$$

where C is a constant $m \times n$ matrix and $\det CB \neq 0$. To define the equations for a sliding mode along the intersection of the surfaces $s_i = 0$ $(i = 1, \ldots, m)$, the solution of the equation $\dot{s}_i = CAx + CBu + Cg(t) = 0$ for the control

$$u_{eq} = -(CB)^{-1}(CAx + Cg(t))$$

should be substituted into the original equation

$$\frac{dx^*}{dt} = [I_n - B(CB)^{-1} C] Ax^* + [I_n - B(CB)^{-1} C] g(t)$$

Under the initial conditions $Cx(0) = 0$ this equation is the equation for ideal sliding *.

In a nonideal sliding mode the real control function $\tilde{u}$ which, by virtue of (2.7), insures motion in the Δ-vicinity of the intersection $s = 0$ can be expressed as $\dot{s}$ which can no longer be equated to zero as is formally done in the equivalent control method

$$\tilde{u} = -(CB)^{-1} C(Ax + g) + (CB)^{-1} \dot{s}$$

Consequently, the equation for real sliding is of the form

$$\frac{dx}{dt} = [I_n - B(CB)^{-1} C] Ax + [I_n - B(cB)^{-1} C] g + B(CB)^{-1} \dot{s}$$

Let us now demonstrate that if any solution of the ideal sliding equation is asymptotically stable, it will be close to the solution of the real sliding within the range of Δ in infinite time interval starting with the time when the sliding mode begins. If $\varphi(t)$ is a transition matrix of the equation for ideal sliding with $g(t) = 0$ (or $\varphi(0) = I_n$), the solution of this equation is of the form

$$x^*(t) = \varphi(t) x^*(0) - \int_0^t \varphi(t - \tau), \quad [I_n - B(CB)^{-1} C] g(\tau) d\tau$$

Write now the solutions of equation for real sliding

$$x(t) = \varphi(t) x(0) - \int_0^t \varphi(t - \tau) [I_n - B(CB)^{-1} C] g(\tau) d\tau +$$

$$+ \int_0^t \varphi(t - \tau) B(CB)^{-1} \frac{ds}{d\tau} d\tau$$

Integrating the last addend by parts, estimate the norm of the difference in these two equations

$$\| x(t) - x^*(t) \| \leqslant \| \varphi(t) \| \| x(0) - x^*(0) \| +$$
$$+ \| B \| \| (CB)^{-1} \| \| s(t) \| + \| B \| \| (CB)^{-1} \| \| \varphi(t) \| \| s(0) \| +$$
$$+ \int_0^t \left\| \frac{d}{d\tau} \varphi(t - \tau) B(CB)^{-1} \right\| \| s \| d\tau$$

* Here as in (2.9) the state vector is denoted as x^* to tell the solution of the equation for ideal sliding from that of the equation for real sliding.

Since in real sliding the inequality $\|s\| \leqslant \Delta$ is valid, the initial conditions $x(0)$ and $x^*(0)$ can always be selected in compliance with (2.7) and the functions $\|\varphi(t)\|$ and $\int_0^t \left\| \frac{d}{d\tau} \varphi(t-\tau) \right\| d\tau$ are bounded on an infinite time interval for asymptotically stable systems, then there exists a positive number N such that

$$\| x(t) - x^*(t) \| \leqslant N\Delta$$

and

$$\lim_{\Delta \to 0} x(t) = x^*(t) \text{ with } 0 \leqslant t < \infty$$

Note that in a general case, this property of "closeness" was proved for any finite time interval, in the case of exponential stability — starting with a certain time instant and in the case of an asymptotically stable time-invariant linear system — starting from the initiation of the sliding mode.

An important point is that exponential convergence of the system (2.9) is a substantial rather than formal requirement when no exponential upper bound may be found for the solution of the system, although this solution does asymptotically approach a certain equilibrium point, the solution of the system (2.8) or its equivalent (2.13), which is different from (2.9) in the addend $B(GB)^{-1}G\dot{s}$ may tend to infinity*.

In this and other cases, e.g. if the solution of the system (2.9) is unstable ($\lim_{t \to \infty} x = \infty$) or stable but not asymptotically, no matter how close the trajectories of the two systems (2.8) and (2.9) are at the beginning, they will remain close over a finite time interval but finally can diverge. Because the "proxi-

---

* Thus, for the first-order equation $\dot{x} = -\frac{1}{t} x$ the trivial solution is asymptotically stable but the solution $x = c\frac{1}{t}$ ($c = \text{const}$) has no exponential upper bound and for the equation $\dot{x} = -\frac{1}{t} x + \delta$ with a constant δ the solution $x = c\frac{1}{t} + \frac{1}{2}\delta t$ tends to infinity.

mity interval" infinitely expands with Δ going to zero and because in all real processes Δ is nonzero (albeit very small), one has either to accept equations (2.6) as "correct" or give up writing sliding equations since no such equations hold over an infinite interval (which is also true for equations correctly describing any unstable physical processes).

Let us now show how Filippov's technique can be applied to the problem and prove that in the case of systems linear with respect to control the result of this technique coincides with equation (2.6) obtained by the equivalent control method with the consequent result of the limiting process described above.

Following Filippov's technique, make up an equation for a minimal convex hull for all state velocity vectors that describe the motion in the vicinity of any point on the intersection of discontinuity surfaces:

$$f^0 = f(x, t) + B(x, t) \sum_{i=1}^{2^m} \mu_i u^i$$

where $\mu_i \geqslant 0 \left(\sum_{i=1}^{2^m} \mu_i = 1 \right)$ are the parameters defining the points on a convex hull and u^i are possible control vectors in different regions of the state space that are adjacent to the point under study.

The state velocity vector of sliding motion belongs to that hull and lies on the intersection of planes tangential to the discontinuity surfaces in that point. Therefore the direction of the vector is given by the condition

$$Gf^0 = 0$$

or

$$G\left(f + B \sum_{i=1}^{2^m} \mu_i u^i\right) = 0$$

Solving this equality with respect to the vector

$$z = \sum_{i=1}^{2^m} \mu_i u^i$$

(and assuming, as before, that $\det GB \neq 0$) and substituting z into the expression defining the vector f^0 yield a sliding motion equation which coincides with equation (2.6).

Thus for systems linear with respect to control the equivalent control method is a standard way of obtaining the sliding equations resulting from Filippov's approach; the above limiting process substantiates the validity of Filippov's reasoning in the vector cases*.

Remark. This method also is applicable to the case where the sliding mode occurs at the intersection of only $m - k$ surfaces $(0 < k \leqslant m - 1)$ for instance, $s_i = 0$ $(i = 1, \ldots, m - k)$ rather than of all m surfaces. In that case the controls $u_{m-k+1}, \ldots, u_m$ are continuous functions satisfying all the conditions formulated in Sec. 2 and to define the equations of this sliding mode one has to find $u_{i\,\mathrm{eq}}$ $(i = 1, \ldots, m - k)$ from the equation set

$$\dot{s}_i = 0 \; (i = 1, \ldots, m - k)$$

and substitute the solution for the associated $u_i (i = 1, \ldots, m - k)$ in the original system. This motion will explicitly depend on the other components $u_{m-k+1}, \ldots, u_m$ of the control vector.

Sec. 3. Nonlinear Systems with Scalar Control

Let us now consider the case where the control u is a scalar but the right-hand side of the equation depends on it nonlinearly

$$\dot{x} = f(x, t, u) \tag{2.21}$$

The control has discontinuities on a certain surface

$$u = \begin{cases} u^+(x, t) \text{ with } s(x) > 0 \\ u^-(x, t) \text{ with } s(x) < 0 \end{cases} \tag{2.22}$$

Applying the equivalent control method to this equation can yield a certain differential equation acting along a discontinuity

---

* One example of the problem described in this section is the system of Ref. [64] where a gradient procedure of solving a linear programming problem is implemented and the gradient of the function to be minimized has discontinuities on several surfaces in the space of input parameters. Applying the equivalent control method one can obtain an equation of sliding motions in such systems and prove that the function to be minimized will decrease in a sliding mode on discontinuity surfaces as well as outside them.

surface which, as before, can be regarded as an equation of ideal sliding. Let us show that this equation does not generally coincide with the one obtained from Filippov's procedure. This fact is easily verified geometrically. In compliance with the equivalent control method u_{eq} should satisfy the condition

$$\dot{s} = \text{grad } s \cdot f(x, t, u_{eq}) = 0 \tag{2.23}$$

Let us now plot a locus $f(x, t, u)$ for any fixed vector x belonging to the discontinuity surface and a fixed time t assuming that u is a scalar parameter (Fig. 9*a*). The value $u = u_{eq}$ is a point on that locus and therefore the end of the vector $f(x, t, u_{eq})$ is on it. On the other hand, from (2.23) it follows that the vector is in a plane tangential to the discontinuity surface in the point x under consideration. Consequently, to determine the state velocity vector of the sliding motion following the logic of the equivalent control method, a straight line should be traced from the point x to the point where the tangential plane intersects the locus (Fig. 9*b*). By virtue of Filippov's method, however, the state velocity vector is obtained by finding the intersection point of that tangential plane with a straight line connecting the ends of the vectors $f^+ = f(x, t, u^+)$ and $f^- = f(x, t, u^-)$. The ends of these vectors also belong to the above locus and the straight line connecting them is its chord (Fig. 9*e*). As the locus is a spatial curve, the vectors f^0, found by Filippov's method and $f(x, t, u_{eq})$ found by the equivalent control method are generally neither collinear, nor equal. They coincide necessarily only in the case where the locus is a straight line (this is true for the systems linear with respect to control).

It follows that except for an unlikely locus where the end of the vector $f(x, t, u_{eq})$ is on the straight line which connects the ends of the vectors f^+ and f^- (the dotted line in Fig. 9*c*), the equivalent control method and Filippov's procedure yield the same results only for systems which are linear with respect to control. For systems where control is nonlinear the legitimacy of any way of continuation of the solution in the discontinuity surface should be verified by limiting processes which require introduction of nonidealities. It was shown in the Introduction that for three kinds of nonidealities (hysteresis, delay, and small inertias) the equations for sliding mode in this nonlinear case also coincide with those obtained from Filippov's method.

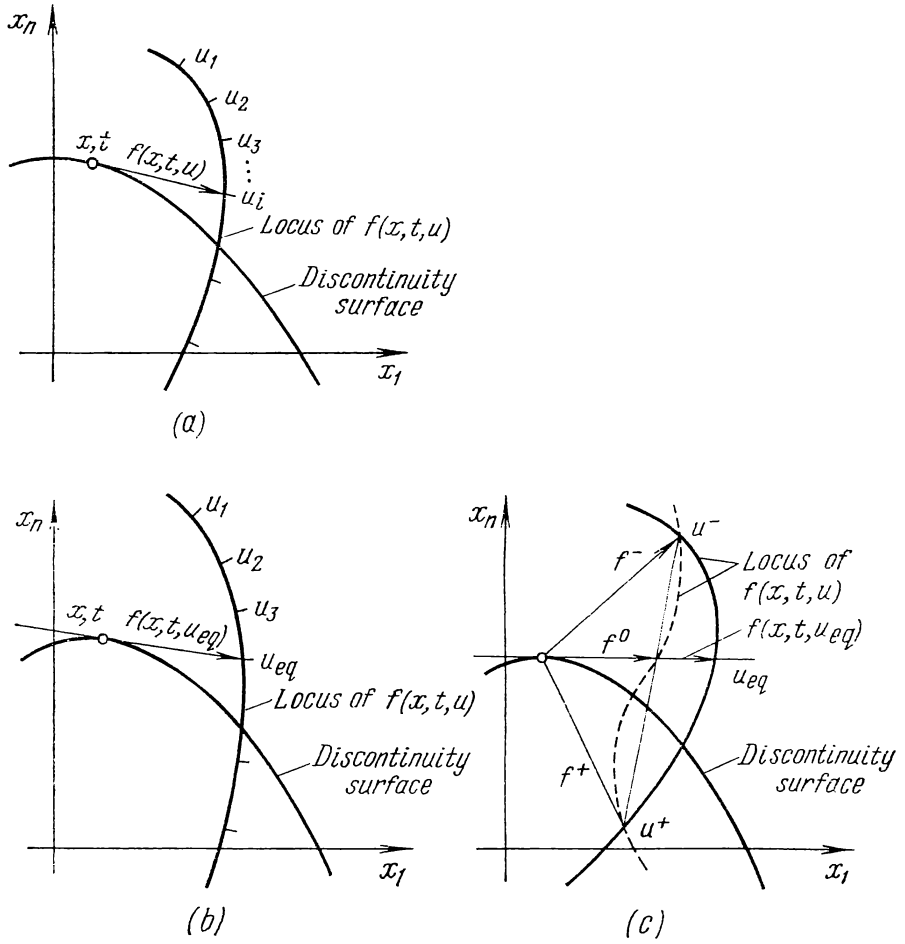

FIG. 9

Now let us take up a limiting process of a different kind and show that it results in equations of the equivalent control method. This limiting process requires the replacement of a discontinuous control function by a continuous response with a linear medium zone outside which the ideal discontinuous function and its continuous approximation are the same. When the medium zone tends to zero, the gain within this zone tends to infinity. This limiting process is in fact the gist of the technique of Ref. (105) whereby sliding mode equation is obtained by replacing discontinuous control with linear control whose gain is infinite.

References [75, 105] have studied equations linear with respect to all x as well as to u. In this case the equations resulting from the replacement of u by ks with k subsequently tending to zero can be easily obtained. For equations representing a nonlinear system this reasoning is not so easily applied. But when the function u_{eq} has derivatives bounded with respect to all arguments, the result of this limiting process can be obtained in the following way.

As before, represent s in the form

$$\dot{s} = \text{grad } s \cdot f\ (x,\ t,\ u) \tag{2.24}$$

and recall that $\dot{s} = 0$ with $u = u_{eq}$, or

$$\text{grad } s \cdot f\ (x,\ t,\ u_{eq}) = 0$$

Rearrange equation (2.24) into

$$\dot{s} = -\theta\ (u - u_{eq}) \tag{2.25}$$

About the function

$$\theta\ (x,\ t,\ u) = -\frac{\text{grad } s \cdot f}{u - u_{eq}}$$

it is assumed that $|\theta\ (x,\ t,\ u)| \geqslant \theta_0 > 0$, $\theta_0 = \text{const}^*$. It will be assumed that $u^+ > u^-$. Then by virtue of the very fact that a sliding mode exists (which implies that in the vicinity of the surface $s(x) = 0$ the trajectories are directed towards it, or $\dot{s}\ (u^+) < 0$ and $\dot{s}(u^-) < 0$) $\dot{s}$ decreases with u varying from u^+ to u^- and becomes zero with $u = u_{eq}$ and the function $\theta\ (x,\ t,\ u)$ is positive by virtue of (2.25) and $\theta\ (x,\ t,\ u) \geqslant \theta_0$.

In compliance with our scheme of reasoning, in order to find motion equations in the vicinity of the surface $s\ (x) = 0$ the control u in equation (2.25) should be replaced by ks, or, which is equivalent, s should be replaced by u/k

$$\tau\dot{u} + \theta u = \theta u_{eq}, \text{ where } \tau = 1/k \tag{2.26}$$

With k tending to infinity, or with τ tending to zero, the solution of equation (2.26) for $u(t)$ over a finite time interval $[0,\ T]$

---

* This condition eliminates only the case where the locus tangential is in a tangential plane or it approaches this as close as desired outside the immediate vicinity of the intersection point.

tends to u_{eq} in the sense that for any pair of positive numbers $\Delta t < T$ and ε there is δ such that with $0 < \tau \leqslant \delta$ the inequality $|u - u_{eq}| \leqslant \varepsilon$ holds with any $t \in [\Delta t, T]$.

To prove this assertion let us consider solution of the equation $\tau \dot{u} + \theta u = \theta u_{eq}$ with θ being a certain time function

$$u = u(0)\, e^{-\frac{1}{\tau}\int_0^t \theta(\gamma)\, d\gamma} + \frac{1}{\tau} e^{-\frac{1}{\tau}\int_0^t \theta(\gamma)\, d\gamma} \int_0^t \theta(\gamma)\, u_{eq} \times$$

$$\times e^{\frac{1}{\tau}\int_0^\gamma \theta(\lambda)\, d\lambda} d\gamma = u(0)\, e^{-\frac{1}{\tau}\int_0^t \theta(\gamma)\, d\gamma} +$$

$$+ e^{-\frac{1}{\tau}\int_0^t \theta(\gamma)\, d\gamma} \int_0^t u_{eq}\, de^{\frac{1}{\tau}\int_0^\gamma \theta(\lambda)\, d\lambda}$$

Integration of the second addend by parts yields

$$u = u(0)\, e^{-\frac{1}{\tau}\int_0^t \theta(\gamma)\, d\gamma} + u_{eq} - u_{eq}(0)\, e^{-\frac{1}{\tau}\int_0^t \theta(\gamma)\, d\gamma} -$$

$$- e^{-\frac{1}{\tau}\int_0^t \theta(\gamma)\, d\gamma} \int_0^t \frac{du_{eq}}{d\gamma}\, e^{\frac{1}{\tau}\int_0^t \theta(\lambda)\, d\lambda} d\gamma$$

By virtue of the assumptions on all the functions included into the original system the value of $\left|\frac{du_{eq}}{d\gamma}\right|$ is bounded on any finite time interval $[0, T]$ by a certain number M; the function θ is bounded from below by a certain positive number θ_0; therefore

$$|u - u_{eq}| \leqslant |u(0)\, e - u_{eq}(0)|\, e^{-\frac{1}{\tau}\int_0^t \theta(\gamma) d\gamma} + \frac{M\tau}{\theta_0}$$

As a result for any infinitesimal Δt

$$\lim_{\tau \to 0} u = u_{eq} \text{ with } \Delta t \leqslant t \leqslant T.$$

This implies that replacement of the control u by ks and then making k go to infinity is equivalent to replacement of

u by u_{eq}, or leads to the same results as the equivalent control method does.

Consequently, the limiting processes mentioned in the Introduction and performed here for systems nonlinear with respect to control lead to different results. In the former case these are equations obtainable from Filippov's procedure and in the latter, from the equivalent control method. This demonstrates that in systems nonlinear with respect to control the equations outside the discontinuity surface generally prevent writing down unambiguously equations for sliding along a surface. Therefore the class of nonidealities should be found for which this unambiguity is valid.

For this purpose write down equations (2.21), (2.22) which specify the motion of our system, along the discontinuity surfaces in the form

$$\dot{x} = f^+ + u^*(f^- - f^+) \tag{2.27}$$

where f^+ and f^- are continuous functions and u^* is a certain new control function* also having discontinuities on the surface $s(x) = 0$:

$$u^* = \begin{cases} 0 \text{ with } s(x) > 0 \\ 1 \text{ with } s(x) < 0 \end{cases} \tag{2.28}$$

When nonidealities have been introduced into the system (2.21), the control u should be replaced by a certain control $\tilde{u}$ which insures motion in the Δ-vicinity of the surface $s(x) = 0$. Generally speaking, for any function $\tilde{u}$ this class may have no function $\tilde{u}^*$ such that the systems (2.21) with $u = \tilde{u}$ and (2.27) with $u^* = \tilde{u}^*$ are equivalent.

If, however, the nonidealities are such that the function $\tilde{u}$ can take only either of the two values, u^+ or u^-, such a function $\tilde{u}^*$ always exists. This implies that for such nonidealities the systems (2.27), (2.28) linear with respect to control can be treated instead of (2.21), (2.22). This artificial linearization results in a system for which, as was proved in Sec. 2, the equivalent control method can be used. Application of this method to the system (2.27) leads to sliding equations which are the same as equations (1.10) obtained by using Filippov's procedure.

---

* The control function u^* acts as the parameter μ in Filippov's procedure described in the Introduction.

This is not the only possible way of artificial linearization. But it can be easily seen that any linearization technique invariably leads to the same sliding equations. The general representation of a system linear with respect to control is

$$\dot{x} = f^0(x, t) + b(x, t)u^*$$

In this equation u^* is no longer 0 or 1 but is a discontinuous function

$$u^* = \begin{cases} u^{*+}(x, t) \text{ with } s(x) > 0 \\ u^{*-}(x, t) \text{ with } s(x) < 0 \end{cases}$$

where u^{*+} and u^{*-} are arbitrary continuous functions satisfying the conditions of Sec. 2. For the system represented in this way to be equivalent to the initial one (2.21), the relations

$$f^0 + bu^{*+} = f(x, u^+), \quad f^0 + bu^{*-} = f(x, u^-)$$

or

$$f^0 = \frac{f(x, u^-)\, u^{*+} - f(x, u^+)\, u^{*-}}{u^{*+} - u^{*-}}$$

$$b = \frac{f(x, u^+) - f(x, u^-)}{u^{*+} - u^{*-}}$$

should hold. Substituting the resultant values of f^0 and b into a system of general form, linear with respect to u^* and applying the equivalent control method to it we will obtain, no matter what the form of the functions u^{*+} and u^{*-} is, a sliding equation analogous to (1.10) which was obtained by Filippov's method.

Thus, if the nature of nonidealities is such that the control $\tilde{u}$ can take, for real sliding, only one of the two possible values*, $u^+(x, t)$ or $u^-(x, t)$, then the equations obtained by Filippov's method or after prelinearization by introducing a new control u^* with the equivalent control method can be regarded as sliding equations.

Let us recognize the essential difference between the equations of sliding motion obtained when the original is linear with respect to control and the case where the equation is artificially made to take this form. In the former, "natural" case, the sliding equation (1.6) obtained for the scalar control ($m = 1$) is independent of the values of u^+ and u^- and is, in this sense, comple-

* Nonidealities of the hysteresis, delay and dynamic types are particular cases of this class of nonidealities.

tely defined by continuous functions in motion equations of the original system. In the latter, "artificial" case, equation (1.10) for sliding motion is essentially dependent on u^+ and u^-, or on the form of the discontinuous function; therefore, by changing nothing in the equations but the size of the discontinuity, the motion in sliding mode can be influenced. This fact can be illustratively interpreted by using the locus introduced above (Fig. 9*a*). Indeed, in the "natural" case, where the system is linear with respect to control $\dot{x} = f(x, t) + b(x, t)u$, the locus is a straight line which is completely defined by the vectors $b(x, t)$ and $f(x, t)$ (Fig. 10*a*). The values of u^+ and u^- define only the points on the locus that should be used. Then the straight line, which in compliance with Filippov's method connects the ends of the vectors f^+ and f^- is always the same and independent of u^+ and u^- (Fig. 10*a*); when these change, for instance from u^+_1, u^-_1 to u^+_2, u^-_2, the state velocity vector f^0 of the sliding mode does not change. In the "artificial" case the vectors f^+ and $f^- - f^+$ (the same as f and b for the "natural" case) now depend on u^+ and u^-; therefore the locus is a spatial curve and the specific values of u^+ and u^- dictate the position of the straight line connecting the ends of the vectors f^+ and f^- and thus of f^0, which is the velocity vector in a sliding mode (Fig. 10*b*).

The above reasoning leads to still another essential difference of discontinuous systems, linear and nonlinear with respect to scalar control, which can be either $u^+(x, t)$ or $u^-(x, t)$ in the motion with the nonidealities. For the linear case there is a certain continuous control, equal to u_{eq}, which, when substituted into the initial equation, leads to equations representing motion in sliding mode. For the nonlinear case there is, generally speaking, no continuous control which would result in a motion analogous to the one in sliding mode. This follows from the fact that for a continuous controls all velocity vectors are on the locus $f(x, t, u)$ (Fig. 10*b*), and in the nonlinear case the velocity vector for sliding mode does not stay on the locus.

For arbitrary nonidealities it seems desirable to consider various limiting processes in terms of robustness with respect to small parameters representing unrecognized small delays, time constants, etc. that exist in actual systems. In a general case of a real sliding mode the control u can take values other than $u^+(x, t)$ or $u^-(x, t)$ in a certain small vicinity ε of a discontinuity surface, this is the reason why different types of non-

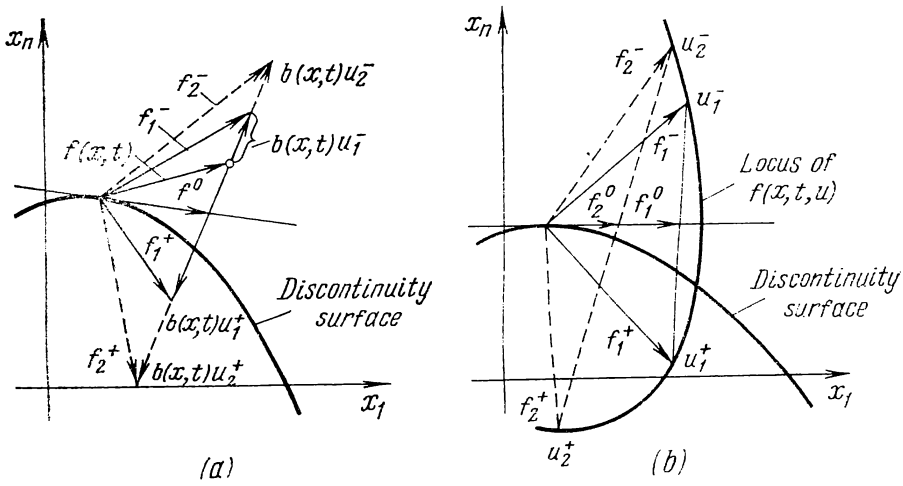

FIG. 10

idealities lead to different sliding equations, when ε tends to zero. Besides small delays, time-constants, random disturbances inherent in any real systems make the describing point oscillate around the switching surface with a small and also finite amplitude Δ. When ε tends to zero these oscillations remain and the control $\tilde{u}$ will "ever more often" take the values u^+ or u^- because $\tilde{u}$ can take values other than these only in the region ε. According to the above reasoning an equation of such motion will differ from equation (1.10) obtained by Filippov's method by an infinitesimal of order Δ*. The heuristic considerations presented here imply that for nonlinear cases and an arbitrary form of nonidealities only those limiting processes are robust which lead to equations obtained by Filippov's method or, following prelinearization, by the equivalent control method. Therefore these procedures seem preferable as techniques for obtaining equations of ideal sliding.

Sec. 4. Systems Nonlinear with Respect to Control

Let us consider a general case of a discontinuous system with vector control described by the equations

$$\dot{x} = f(x,\ t,\ u) \tag{2.29}$$

* In the case where the small parameter is a delay this fact can be proved by using the reasoning of Item 2, Sec. 5, Ch.I.

where x and f are n-dimensional vectors, u is an m-dimensional control whose each component has discontinuities on a proper surface defined by the equation $s_i(x) = 0$:

$$u_i(x, t) = \begin{cases} u_i^+(x, t) \text{ with } s_i(x) > 0 \\ u_i^-(x, t) \text{ with } s_i(x) < 0 \quad (i = 1, \ldots, m) \end{cases} \tag{2.30}$$

Assume that on a certain time interval ideal sliding on the intersection of discontinuity surfaces exists; in other words, the trajectory of the describing point over this interval belongs to any intersection vicinity which can be as small as desired. It is still required to reasonably specify the sliding equation by using the equations of motion outside the discontinuity surfaces and by the equations of the surfaces themselves. The reasoning of the equivalent control method can be formally applied to this vector case too but its validity was substantiated by the limiting process only for systems linear with respect to vector control.

The following example of the vector case of a general form (2.29), (2.30) will demonstrate that in systems of this kind the contention of sliding mode is ambiguous since the equations of that motion cannot be obtained unique from a limiting process which implies study of systems with nonidealities tending to zero. The system under consideration is described by the equations*

$$\begin{cases} \dot{x}_1 = u_1 \\ \dot{x}_2 = u_2 \\ \dot{x}_3 = u_1 u_2 \end{cases}$$

where

$$u_1 = \begin{cases} +1 \text{ with } x_1 < 0 \\ -1 \text{ with } x_2 > 0 \end{cases}$$

$$u_2 = \begin{cases} +1 \text{ with } x_1 < 0 \\ -1 \text{ with } x_2 > 0 \end{cases}$$

Assume that both relay elements that implement the controls u_1 and u_2 have the same hysteresis loops. In real sliding motion along the discontinuity surface $x_1 = 0$ and $x_2 = 0$ the functions

* The example was developed by D. B. Izosimov.

u_1 and u_2 are periodic with a zero average component and their product is also a periodic function but its average component may be other than zero. This average component can take any value A from -1 to $+1$ depending on the phase relation between u_1 and u_2 at the time when a sliding mode starts. If now the width of hysteresis loops tends to zero, the frequency of the real sliding mode will infinitely increase and the resultant motion will depend only on the average values of the control, or will be described by the equations

$$\begin{cases} \dot{x}_1 = 0 \\ \dot{x}_2 = 0 \\ \dot{x}_3 = A \end{cases}$$

Since A is uncertain, the sliding mode is also necessarily uncertain.

Although the robustness of the system in this example can be doubted, it still shows that in the nonlinear case there can be ambiguities. The need in taking this ambiguity seriously is seen from the attempts at extending Filippov's reasoning to the system (2.29). In compliance with the procedure described in Ref. [103] an equation should be derived for a minimal convex hull for the velocity vectors in the vicinity of the point which lies on the intersection of discontinuity surfaces

$$f^0 = \sum_{i=1}^{2^m} \mu_i f(x, t, u^i)$$

where the parameters $\mu_i \geqslant 0 \left(\sum_{i=1}^{2^m} \mu_i = 1 \right)$, and u^i are still all possible control vectors in the vicinity of that point. According to Filippov the velocity vector of a sliding motion should belong to that hull and lie on the intersection of planes tangential to discontinuity surfaces, or satisfy the condition

$$G \sum_{i=1}^{2^m} \mu_i f(x, t, u^i) = 0$$

(as before, the rows of the matrix G are gradients of the functions $s_i(x)$). Therefore to determine this vector we obtain a system of m equations (whose number is equal to that of dis-

continuity surfaces) with respect to 2^m unknown coefficients μ_i with only one constraint $\sum_{i=1}^{2^m} \mu_i = 1$. It is clear that generally speaking this problem has no unambiguous solution whereas in the linear case of Sec. 2 the problem was solved unambiguously thanks to linearity of the m-dimensional vector

$$z = \sum_{i=1}^{2^m} \mu_i u^i$$

was the parameter to be found.

This example and these general considerations show that there is no unambiguous solution to the problem of determining the equation of a sliding mode for the system (2.29) and that additional constraints should be introduced if an unambiguous solution is to be obtained.

Assume now that the right-hand side of equation (2.29) can be represented in the form*

$$f(x, t, u) = \sum_{i=1}^{m} f^i(x, t, u_i) \tag{2.31}$$

where f^i are n-dimensional vectors. In this case outside the discontinuity surfaces equation (2.29) can be respresented as

$$\dot{x} = f^+ + Fu^* \tag{2.32}$$

where f^+ is a vector of $\sum_{i=1}^{m} f^i(x, t, u_i^+)$, F is a matrix

$$\| f^1(x, t, u_1^-) - f^1(x, t, u_1^+), \ldots, f^m(x, t, u_m^-) - $$
$$- f^m(x, t, u_m^+) \|$$

and the components of the vector, $u^* = (u_1^*, \ldots, u_m^*)$ are

$$u_i^* = \begin{cases} 0 \text{ with } s_i > 0 \\ 1 \text{ with } s_i < 0 \end{cases} (i = 1, \ldots, m)$$

---

* The necessary and sufficient conditior for the right-hand side of equation (2.29) to be represented as (2.31) is that the second mixed derivatives $\partial^2 f / \partial u_i \partial u_j$ be zero with $i \neq j$.

Consequently, with the condition (2.31) being true, the original system (2.29) can be reduced to the system (2.32) which is linear with respect to the new control u^*. As shown in Sec. 2 sliding equations in such systems can be obtained by the equivalent control method. (Certainly under the sufficiently general assumptions on the form of the functions f^+, F and s_i). But whether these equations are a correct description of sliding in the original system (2.29) depends on whether the systems (2.29) and (2.32) are identical even with the nonidealities which were introduced into the system when this method was substantiated. If the nature of the nonidealities is such that the control can be either $u^+(x, t)$ or $u^-(x, t)$*, then, following the reasoning of Sec. 3 for systems nonlinear with respect to scalar control, the equivalence of the systems (2.29) and (2.32) can be confirmed. For this class of nonidealities the application of the equivalent control method to the system (2.32) yields sliding equations for the system (2.29). Following the formal procedure of this method, $\dot{s}$ should be determined (s is still an m-dimensional vector with components $s_1, \ldots, s_m$) along the system trajectories (2.32) and made equal to zero. An equivalent control $\dot{u}_{eq}$ is the solution of this equation with respect to u^*

$$u^*_{eq} = -(GF)^{-1} Gf^+ \tag{2.33}$$

where G is an $m \times n$ matrix whose rows are gradients of the functions $s_i(x)$ and it is assumed that $\det GF \neq 0$. The equation of sliding motion is found by substituting u^*_{eq} into the system (2.32)

$$\dot{x} = [I_n - F(GF)^{-1} G]f^+, \quad s(x(0)) = 0 \tag{2.34}$$

Since during the sliding mode $s \equiv 0$, this identity may be used, as was done with the system (2.6) in order to eliminate m coordinates and to write an $(n - m)$-th order equation of sliding mode with respect to the $n - m$ remaining coordinates.

When condition (2.31) is not met and nonidealities can be of any form, unambiguity of sliding motion remains an open question. Systems can probably be found with sliding motion depending on the way in which small nonidealities tend to zero, on the other hand, the class of systems for which the con-

* Such nonidealities are the delay, hysteresis and small time constants neglected in the ideal model.

cept of a sliding mode has an unambiguous sense seems not to be completely covered by systems satisfying the condition (2.31) and having nonidealities of the above type. Therefore, it is necessary to expand the conditions under which in systems of the form (2.29) sliding mode equations would be determined unambiguously through limiting processes*. We will limit ourselves only to a statement of this general problem.

Sec. 5. Singularities in Vector Cases

The equation $\dot{s} = 0$ thus far has been assumed nonsingular and an equivalent control has been derived from it unambiguously. (For the system of Sec. 4 this assumption meant that $\det GF \neq 0$.) Singular cases are those where this condition is not met. The features of sliding motions which appear as a result of various singularities can be more conveniently described for a linear time-invariant system, represented by the equation

$$\dot{x} = Ax + Bu, \; s = Cx \tag{2.35}$$

where A, B, C are constant $n \times n$, $n \times m$, $m \times n$ matrices respectively and the m-dimensional control u varies according to (2.30). The applicability of subsequent reasoning to time varying systems nonlinear with respect to x will be discussed at the end of this section.

The conditions for the existence of equivalent control for the system (2.35) or, which is the same, for the existence of a solution to the system of equations

$$\dot{s} = CAx + CBu = 0 \tag{2.36}$$

with respect to u depend on the ranks of the matrix CB and the matrix D which is obtained by completing the matrix CB with the column CAx. An equivalent control and, therefore, an equation of sliding motion are found unique if $\det CB \neq 0$.

---

* For the cases where limiting processes do not yield unambiguous results, the uniqueness is closely related with the robustness of such a system. Robustness conditions may indicate a unique robust motion among the set of motions resulting from different limiting processes. Then it would be natural to assume that only this motion will arise in the real system and to regard it as an ideal sliding motion.

In singular cases, or when det $CB \neq 0$* the system (2.36) is consistent only when the ranks r_{CB} and r_D of the matrices CB and D respectively are equal. Note that in singular cases the rank of the matrix D depends on the state vector which lies on the discontinuity surface because we deal with sliding modes on this intersection. On certain sets belonging to the intersection manifold and having a zero measure the rank of the matrix D may be found to decrease. Let us not take up, for the time being, special cases where the state trajectory goes through these singular sets. Then for a singularity of a general form (or with $r_{CB} < m$) the following three cases may arise:

Case 1°. Despite the singularity, the sliding mode along the intersection of the discontinuity surfaces is univalently defined by the equations specified outside these surfaces. The sliding equations are found by using the equivalent control method.

Case 2°. Singularity results in ambiguity of sliding modes; in other words, although the equations outside the discontinuity surfaces are defined unambiguously, the equations for sliding along their intersection are not** because certain components of the control vector may be arbitrary functions.

Case 3°. Singularity prevents the state trajectory from being on the intersection of discontinuity surfaces under any controls.

The first two cases arise if the ranks of the matrices CB and D coincide (or $r_{CB} = r_D$) and the system (2.36) is consistent. Select in this case $m - r_{CB}$ components of the vector u arbitrarily, derive from equation (2.36) the remaining r_{CB} components of that vector and thus determine the equivalent control function. After substituting this into original equation (2.35)

---

* In actual systems singular cases appear mostly because at least one of the matrices C or B has a nonmaximal rank. An example of a singular C is a system where several control components have discontinuities on the same plane simultaneously. If more than one control is applied to the same inputs of the system, the rows of the matrix B associated with these control functions are collinear and this matrix is thus singular. Singularity results also from a combination of these two cases. Cases are naturally possible where singularity results from the mutual positioning of the row vectors of the matrix C and the column vectors of the matrix B in the n-dimensional parameter space. Thus, if in the scalar case (with $m = 1$) the vectors c and b are orthogonal, the rank of the product cb is zero.

** Yu. I. Neymark seems to be the first to notice the appearance of this ambiguity [79].

we will have a sliding equation. It may of course happen so that the arbitrarily selected components of the vector u will cancell. Then, despite the singularity, the sliding motion is determined unambiguously, or Case 1° holds. If the resultant sliding equation depends on the $m - r_{CB}$ arbitrarily selected components, Case 2° occurs. Case 3° holds where the rank of the matrix D is greater than that of the matrix CB ($r_D > r_{CB}$), i.e. the system (2.36) is inconsistent; therefore there is no equivalent control or sliding mode in such a system. To verify these conclusions, the reasoning used in Sec. 2 to prove the equivalent control method in Sec. 2 may be applied.

In compliance with this reasoning the vector u in equation (2.35) should be replaced by the control vector $\tilde{u}$ which recognizes all nonlinearities (without specifying their form) and leads to a real sliding mode in the vicinity of $\| s \| \leqslant \Delta$. The vector $\dot{s}$ determined along the system trajectories, $\dot{s} = CAx + CB\tilde{u}$, should be regarded as an equations set for the control $\tilde{u}$. Since the resultant equality holds everywhere, the rank of the matrix D^* obtained by adding the column $CAx - \dot{s}$ to the matrix CB is equal to that of the matrix $CB(r_{CB} = r_{D^*})$. For Cases 1° and 2° $m - r_{CB}$ control components should be selected arbitrarily, the remaining r_{CB} components found, and substituted into the original system; then the limiting process of Sec. 2 should be arranged. In Case 3° ($r_D > r_{CB}$) subtraction of the vector $\dot{s}$ from the last column of the matrix D will decrease the rank of the resultant matrix D^* because $r_D > r_{CB} = r_{D^*}$. For this reason the vector $\dot{s}$ should take quite definite values depending on the matrices A, B and C and the vector x. Using these facts and ordinary methods of linear algebra let us show that the value of $\| s \|$ will necessarily leave the small Δ-vicinity of the intersection of discontinuity surfaces. Let us integrate the equation $CB\tilde{u} + CAx = \dot{s}$ over a certain small time interval bearing in mind that in a real sliding mode the function $\tilde{u}$ is integrable

$$CB\int_0^{\Delta t} \tilde{u}\, dt + CAx_0\, \Delta t + O(\Delta t) = s(\Delta t) - s(0)$$

Here x_0 is the value of the vector x at the initial time, $O(\Delta t)$ is a second order infinitesimal. Denote $\tilde{u}_{\text{av}} = \frac{1}{\Delta t}\int_0^{\Delta t} \tilde{u}\, dt$ and

compute the norm of increment of s over that time interval

$$\| s(\Delta t) - s(0) \| = \| CB\tilde{u}_{av} + CAx_0 + O(\Delta t) \| \Delta t$$

($O(\Delta t)$ is a first-order infinitesimal).

The rank of CB is smaller than that of D (D results from completing the matrix CB with a column CAx_0).

This implies that the vector CAx_0 is not a linear combination of columns of the matrix CB and therefore for the right-hand side of the resultant equation the estimate

$$\min_{\tilde{u}_{av}} \| CB\tilde{u}_{av} + CAx_0 + O(\Delta t) \| \Delta t \geqslant \varkappa \Delta t$$

is valid with Δt small enough ($\varkappa$ is a certain positive value). The same estimate is also valid for the left-hand side of the equation $\| s(\Delta t) - s(0) \| \geqslant \varkappa \Delta t$ i.e. $\| s \|$ will have a finite increment over the time Δt. This implies that a sliding mode becomes impossible since this motion results from real sliding in the Δ-vicinity of the manifold $s = 0$ with Δ tending to zero.

Let us see in more detail to which of the three cases various kinds of singularity can lead.

Case 1°. In order to show the possibility of existence of an unambiguous sliding motion in the case where the matrix CB is singular turn to the system in which both matrices C and B are singular and their ranks are the same $r_C = r_B < m$. Since $r_B < m$, the vector Bu in the system (2.35) can be represented as $B'u'$ where B' is an $n \times r_B$ matrix, u' is an r_B-dimensional vector and $r_{B'} = r_B$. Rewriting equation (2.36) with this notation

$$CAx + CB'u' = 0 \tag{2.37}$$

and assuming that $r_{CB'} = r_B$ find equivalent control u'_{eq} from this equation. Substituting $B'u'$ for Bu and u'_{eq} for u' into the original equation (2.35) gives an equation which unambiguously determines the sliding motion. This case is often found, for instance, in variable structure systems in which the scalar control is obtained as a piecewise linear function of state variables (or the matrix B is singular) and the coefficients of this function have discontinuities on the same plane or the matrix C is also singular [100, 110-112].

Case 2°. If only the matrix C is singular (or $r_C < m$, $r_B = m$) and $r_{CB} = r_C$ is true, the sliding motion along the

intersection of discontinuity surfaces is determined ambiguously*.

To illustrate the possibility of ambiguity of this kind take up a system with a two-dimensional control function

$$\dot{x} = Ax + b^1 u_1 + b^2 u_2 \tag{2.38}$$

where b^1 and b^2 are linearly independent vectors and the scalar controls u_1 and u_2 are of relay type and have discontinuities on the same plane (i.e. $m = 2$, $r_B = 2$, $r_C = 1$).

Assume that the elements implementing the controls u_1 and u_2 have hysteresis loops with a width of Δ_1 and Δ_2 respectively while $\Delta_1 < \Delta_2$ and $|u_1| \gg |u_2|$. Then a real sliding mode will take place in a Δ_1-vicinity of the discontinuity plane, the control u_1 will switch at a finite rate and the control u_2 will retain one of its two possible values which it had at the time when the sliding mode started. In a limiting process with Δ_1 and Δ_2 tending to zero, and $\Delta_1 < \Delta_2$ this ambiguity will be preserved** which implies precisely that in our example the degeneration of the matrix C does not unambiguously lead to equations of a sliding mode.

Case 3°. In a system where only the matrix B is singular and $r_{CB} = r_B < m$, $r_C = m$, no sliding mode along the intersection of discontinuity boundaries is possible***. The same conclusion would be made should Filippov's reasoning be applied to the above example (2.36) under the assumption that the vectors b^1 and b^2 are collinear, or $r_B = 1$ and each of the controls has discontinuities on different surfaces. Since all the four possible state velocity vectors in the vicinity of any point on the intersection of discontinuity surfaces lie on the

---

* In this case the columns of the matrix CB and the column CAx are linear combinations of basis column vectors of the matrix C and, since $r_{CB} = r_C$, the completion of CB with CAx does not increase the rank of this matrix; this signifies that $r_{CB} = r_D$ and the system (2.36) has an infinite number of solutions.

** Using the reasoning for the analysis of systems with hysteresis, Ch. 1 shows that even with $\Delta_1 > \Delta_2$ the limiting process also leads to an ambiguous motion equation.

*** The span of columns of the matrix CB is an r_B-dimensional space, $r_B < m$, while the vector CAx belongs to an m-dimensional space which is the span of m basis column vectors of the matrix C. Therefore if the vector x does not lie on the singular set mentioned in the beginning of this Section, then $r_D > r_{CB}$ and the system (2.36) is inconsistent.

same straight line, the minimal convex hull of these vectors is a one-dimensional manifold. In general this manifold does not have common points with the $(n-2)$-dimensional manifold of intersection of discontinuity surfaces, in other words, no motion in sliding mode along this intersection is possible.

Consequently, if the equation $\dot{s} = 0$ determining the equivalent control proves to be singular, the system equation specified outside the discontinuity surface can define the sliding motion along these surfaces either unambiguously or ambiguously; furthermore, the singularity may make motion in sliding mode impossible. These conclusions were arrived at for the linear, time-invariant systems. All the results can, however, be extended to the case of a time-varying system of the form (2.32) linear only with respect to u. To separate Cases 1°, 2° and 3° in this general problem, the conditions mentioned above should be met, but in formulation of these conditions the elements Ax, B and C of linear equations (2.35) should be replaced by the elements f^+, F and G respectively of the system (2.32).

Besides for general time-varying cases where linearity exists only with respect to control, one fact should be remembered. In the system (2.36) linear with respect to u and x the nature of singularity of the equation $\dot{s} = 0$ depended on the constant matrices A, B and C, and as was mentioned in this section the nature of singularity may change only in the zero-measure sets at the intersection of discontinuity surfaces. In the case of a time-varying system, nonlinear with respect to x, the factors acting as the matrices A, B and C are themselves dependent on x and t; therefore the nature of singularity may change with time and space both upon change in dimensionality of the discontinuity surfaces intersection and inside that manifold on the subsets which should not necessarily have a zero measure. In deriving equations of sliding mode by the equivalent control method, special attention should be given to the points lying on the zero measure sets on which the system $\dot{s} = 0$ is consistent and to the points on the boundary of two or more nonzero measure sets with various natures of singularity for this system. The specifics of sliding motions in these cases is that of all possible trajectories only those are feasible that in the first case belong to the nonzero measure set and in the second case that are not directed towards the sets in which the system $\dot{s} = 0$ is inconsistent.

Sec. 6. Physical Meaning of Equivalent Control

In studying sliding modes, this motion was regarded as a certain idealization. It was assumed that the control changes at an infinitely high rate and the state velocity vector is directed precisely along the discontinuity surface. In reality, however, various nonidealities make the describing point oscillate in some vicinity of the discontinuity surface at a finite rate and, consequently, the control is switched at a finite rate. These nonidealities include a dead zone, hysteresis, delays in switching units and various time constants inherent in the plant and disregarded in making up the model. As a result, during a real, rather than idealized, sliding motion, all components of the control also change at a finite rate taking alternatively the values of u_i^+ and u_i^-. These oscillations have a high frequency and slow components. Therefore it would be reasonable to discuss an average value of the control during a real sliding motion (denoted as u_{av}). This can be measured, for instance, by feeding actual control at the input of a filter whose time constant is sufficiently small to keep the slow component undistorted but is large enough to eliminate the high frequency component*.

An ideal sliding mode was regarded as a motion with all the nonidealities mentioned above tending to zero. The equivalent control method is essentially a formal procedure which gives an equation of sliding mode immediately, without a limiting process. An equivalent control u_{eq} is introduced. Let us show now that u_{eq} used in the method in order to obtain equations of sliding mode, coincides with an average value of the control, u_{av}. This value can be obtained physically at the output of the filter described here if the ideal sliding is regarded as a motion, resulting from a real sliding mode with nonidealities tending to zero.

Further reasoning will refer to a system linear with respect to control for which the method is substantiated

$$\dot{x} = f(x, t) + B(x, t)u \tag{2.39}$$

where x and f are n-dimensional vectors, $B(x, t)$ is an $n \times m$ matrix and the components of the m-dimensional control u have discontinuities on the surfaces $s_i(x) = 0$ by virtue of (2.3)

---

* A filter equation and a more detailed definition of the expressions "small enough" and "large enough" will be clarified below.

Let us also assume that for the functions f, B, s_i, u_i^+, and u_i^- the sufficiently general assumptions of Sec. 2 are valid.

We assume that in system (2.39) a real sliding mode has arisen, i.e. on account of some kind of nonideality, the control will not change in relation with (2.3). Instead, it is a certain function $\tilde{u}$ about which it is only known that it insures the motion of the describing point in a finite Δ-vicinity of the intersection of discontinuity surfaces

$$\| s \| \leqslant \Delta \tag{2.40}$$

where the vector $s = (s_1, \ldots, s_m)$.

Let the average control u_{av} be the output of the linear filter*

$$\tau \dot{u}_{\text{av}} + u_{\text{av}} = \tilde{u} \tag{2.41}$$

where τ is a time constant, $\tilde{u}$ is the control whose variables include the nonidealities of the system and which, if substituted into (2.39) leads to a real sliding mode (2.40). Equation (2.41) describes m first-order filters whose input signals are components of the vector $\tilde{u}$ and the components of the vector u_{av} are output signals of these filters.

Determining the value of $\dot{s}$ through the equations of real sliding,

$$\dot{s} = Gf + GB\tilde{u}$$

we find the control function $\tilde{u}$ from that equation

$$\tilde{u} = -(GB)^{-1}Gf + (GB)^{-1}\dot{s}$$

As before it is assumed that $\det GB \neq 0$ and the rows of the matrix G are gradients of the functions $s_i(x)$. Recall that u_{eq} is formally a solution of the equation $\dot{s} = 0$ for the control and therefore the value of $\tilde{u}$ can be represented in the form

$$\tilde{u} = u_{\text{eq}} + (GB)^{-1}\dot{s} \tag{2.42}$$

---

* In this Section we introduced the notion of u_{av} using the idea of averaging a signal in a linear filter. This idea permits leaving the nonidealities unspecified and limiting ourselves to the condition (2.40). If we followed [108, 109] in specifying the nonidealities recognized and if we introduced a hysteresis or a delay, then u_{av} could be calculated. But firstly, this approach would not extend this reasoning directly to the vector case, and secondly, it is not clear to what extent in the case of nonidealities other than these the conclusions hold.

The properties of equation (2.41) whose right-hand side is (2.42) can be established through the following assertion. Let over a certain time interval $[0, T]$ in the differential equation

$$\tau \dot{z} + z = h(t) + H(t)\dot{s}$$

the magnitudes of the functions $\| h(t) \|$, $\| \dot{h}(t) \|$, $\| H(t) \|$, $\| \dot{H}(t) \|$ be bounded by a certain positive number M, $\| s(t) \| \leqslant \Delta$, $\Delta > 0$. In this equation τ is constant, z, h, $\dot{s}$ are m-dimensional vectors, and $H(t)$ is a square matrix. Then for any pair of positive numbers Δt and ε there exists $\delta(\varepsilon, \Delta t, M, z(0))$ such that if $0 < \tau \leqslant \delta$, $\Delta/\tau \leqslant \delta$ then $\| z - h(t) \| \leqslant \varepsilon$ with $\Delta t \leqslant t \leqslant T$.

For proof write the solution of the equation

$$z(t) = z(0)e^{-\frac{t}{\tau}} + \frac{1}{\tau} e^{-\frac{t}{\tau}} \int_0^t e^{\frac{\gamma}{\tau}} [h(\gamma) + H(\gamma)\dot{s}(\gamma)]\, d\gamma$$

Integration yields

$$z(t) = z(0)e^{-\frac{t}{\tau}} + h(t) - h(0)e^{-\frac{t}{\tau}} - e^{-\frac{t}{\tau}} \int_0^t \dot{h}(\gamma) e^{\frac{\gamma}{\tau}}\, d\gamma +$$

$$+ H(t)\frac{s}{\tau} - H(0)e^{-\frac{t}{\tau}} \frac{s(0)}{\tau} - \frac{1}{\tau} e^{-\frac{t}{\tau}} \int_0^t \left[\dot{H}(\gamma) e^{\frac{\gamma}{\tau}} + \right.$$

$$\left. + \frac{1}{\tau} H(\gamma) e^{\frac{\gamma}{\tau}} \right] s\, d\gamma,$$

$$\| z(t) - h(t) \| \leqslant \| z(0) - h(0) \| e^{-\frac{t}{\tau}} +$$

$$+ M\tau + \frac{2M\Delta}{\tau} +$$

$$+ M\Delta + \frac{M\Delta}{\tau}$$

or

$$\| z(t) - h(t) \| \leqslant \| z(0) - h(0) \| e^{\frac{t}{\tau}} + M(\tau + \Delta) + 3M\frac{\Delta}{\tau}$$

Evidently for any $\Delta t > 0$ $\lim_{\substack{\tau \to 0 \\ \Delta/\tau \to 0}} z(t) = h(t)$ with $\Delta t \leqslant t \leqslant T$, which proves the assertion.

Applying this assertion to equation (2.41) and bearing in mind that $\tilde{u}$ is of the form (2.42) we find that for a finite time $[0, T]$ the value of u_{av} tends to u_{eq} in the sense that for any pair of positive numbers $\Delta t < T$ and ε there is $\delta > 0$ such that with $0 < \tau \leqslant \delta$ and $\frac{\Delta}{t} \leqslant \delta$ the inequality $\| u_{\tau} - u_{eq} \| \leqslant \varepsilon$ holds for $\Delta t \leqslant t \leqslant T$.* In a similar way one can prove, that if the system permits artificial linearization of type (2.32), then u^*_{av} tends to u^*_{eq}. To determine the average value of the control in the original system (2.29), it should be represented as $u = u^+ + Uu^*$ where u^+ and U are a vector and a diagonal matrix with elements u_i^+ and $u_i^- - u_i^+$, respectively, and then prove in the same way that u_{av} tends to $u^+ + Uu^*_{eq}$.

Thus, the notion of "equivalent control" has a tangible physical meaning. This function is equal to the average value of the control and may be measured by a first-order filter if the time constant of the filter is coordinated with the width of the area where motion in real sliding mode takes place.

* This way of u_{av} tending to u_{eq} is not exotic; it naturally follows from the physical properties of the system. Indeed, the vicinity of a discontinuity surface of width Δ where the describing point oscillates should be reduced to make the real sliding mode approach the ideal one. With reduction of Δ the control switching rate should increase because otherwise the amplitude of the oscillations exceeds Δ. To eliminate the high frequency component of the control in sliding mode, the value inverse to the switching frequency should be much less than the time constant τ. However, as has been just found, this value is proportional to Δ; hence the ratio Δ/τ should tend to zero. Finally, the time constant τ should also be made to go to zero because the linear filter (2.42) should not distort the slow component of the control which is equal to u_{av}.

Chapter III

CONDITIONS FOR THE EXISTENCE OF A SLIDING MODE

Sec. 1. Problem Statement, Definition of a Sliding Mode and Necessary Conditions for Its Existence

In the preceding Chapter ways to obtain equations describing motion in sliding mode were described. Now let us find under which conditions motions of this type can appear. These conditions will be studied for the system (2.2), (2.3) linear with respect to control (or its equivalent 2.32) resulting from artificial linearization). As before, it will be assumed that an ideal sliding mode is a motion in the system (2.8) with the vicinity (2.7) where state trajectories of a real sliding mode occur tending to zero. About the control $\tilde{u}$ in the right-hand side of the equation (2.8) for real sliding in the vicinity (2.7) two more assumptions are made

$$\tilde{u}_i = u_i, \text{ if } |s_i| \geqslant \Delta_0 \tag{3.1}$$

Δ_0 is a positive value, and

$$\min(u_i^-, u_i^+) \leqslant \tilde{u}_i \leqslant \max(u_i^-, u_i^+), \text{ if } |s_i| < \Delta_0 \tag{3.2}$$

Both these assumptions are about the form of nonidealities and imply that outside a certain vicinity of discontinuity surfaces the real control $\tilde{u}$ is the same as an ideal one which is defined through (2.3) and inside this vicinity $\tilde{u}$ does not exceed the extreme values that the control u can take.

When discontinuous systems with vector control were studied in Ch. I, by an ideal sliding mode we meant a motion during which state trajectories stay in any, as small as desired, vicinity of the intersection of discontinuity surfaces (or, for the scalar case, of one surface). In order to define the conditions for the existence of a sliding mode, this definition should be formalized by some quantitative relations. This is necessary for vector

cases because for systems with scalar control the conditions for the existence of a sliding mode permit a transparent geometric interpretation (Fig. 5) — the state trajectories in this vicinity of discontinuity surface should go towards it and, consequently the sliding domain consists of points in whose vicinities s and $\dot{s}$ have different signs. In the vector case too, if the condition for the existence of a sliding mode is met on each of the discontinuity surfaces a sliding mode occurs on the intersection of these surfaces. One should find, however, whether the class of systems is not too narrow in which a sliding mode on the intersection of all discontinuity surfaces occurs because on each surface the sliding conditions obtained in the scalar case are met. In most cases the condition for the sliding mode can hardly be described in geometrical terms of mutual positioning of state velocity vectors and in gradients of discontinuity surfaces in the vicinity of their intersection. This doubt can be substantiated by considering the case of a discontinuous system with a two-dimensional control in which a sliding mode exists on the intersection of two discontinuity surfaces, although it does not exist on either.

Assume that in the n-th order system (2.2) the components of a two-dimensional control are of the form

$$u_1 = \operatorname{sign} s_1, \quad u_2 = \operatorname{sign} s_2, \quad \operatorname{sign} s_i = \begin{cases} +1 \text{ with } s_i > 0 \\ -1 \text{ with } s_i < 0 \end{cases}$$

the value of sign 0 is not defined and the vector f, the matrix B and the matrix of the gradients G of the functions $s_1(x)$ and $s_2(x)$ are such that

$$Gf = 0, \quad GB = \begin{pmatrix} -1 & 2 \\ -2 & -1 \end{pmatrix}$$

Then the values of $\dot{s}_1$ and $\dot{s}_2$ are

$$\dot{s}_1 = -\operatorname{sign} s_1 + 2 \operatorname{sign} s_2$$

$$\dot{s}_2 = -2 \operatorname{sign} s_1 - \operatorname{sign} s_2$$

The resultant equations define the projections of motion of such a system on the plane (s_1, s_2) (Fig. 11). From the state portrait it follows immediately that there is no sliding mode on each of the discontinuity surfaces $s_1 = 0$ and $s_2 = 0$. However,

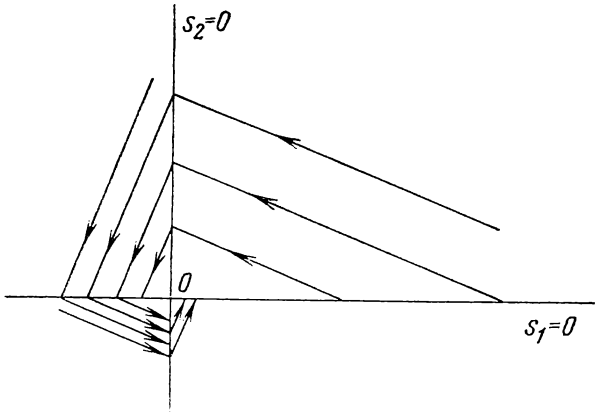

FIG. 11

the state trajectories are such that they reach the vicinity, as small as desired, of the origin of coordinates of the plane (s_1, s_2). Further motion occurs in this vicinity of an $(n-2)$-dimensional manifold of discontinuity surfaces in sliding mode. This example also shows that the conditions for a sliding mode to exist are closely related with the conditions for the convergence of motion projection on the subspace (s_1, s_2) to the origin of that subspace. Therefore it is desirable to try to define the sliding mode in terms of stability theory for nonlinear dynamic systems. Reformulate Lyapunov's well known definition of stability [74] for our specific problem where it is required to find the domain of a sliding mode on the intersection of discontinuity surfaces for the system (2.2), (2.3). This definition also should recognize the fact that the motion in the system results from the system (2.8) with nonidealities tending to zero and the real control $\tilde{u}$ satisfying (3.1) and (3.2).

Definition. In the state space $(x_1, \ldots, x_n)$ of the dynamic system (2.2), (2.3) the domain $S(x, t)$ belonging to the $(n-m)$-dimensional manifold of the intersection of discontinuity surfaces $s_i(x) = 0$ $(i = 1, \ldots, m)$ is a domain of a sliding mode if:

1. This domain contains no entire trajectories of any of the 2^m continuous systems adjacent to this manifold.

2. For any positive ε there are positive quantities Δ_0 and δ such that any motion of the system (2.8), (3.1), (3.2) starting in an n-dimensional δ-vicinity of the domain S may leave the n-dimensional ε-vicinity of the domain S only in an ε-vicinity of its boundaries.

This definition essentially specifies a time-varying stationary domain of values of system coordinates such that inside this domain for the projection of the overall n-dimensional motion on the m-dimensional subspace $s_1, \ldots, s_m$ the origin of coordinates is the point of stable equilibrium "in small". The first condition of the Definition, however, is that the state trajectories cannot be on the manifold of the intersection of discontinuity surfaces if each of the control components becomes either u_i^+ or u_i^-.

Let us use this definition of a sliding mode to formulate and prove the necessary condition for its existence: for a sliding mode to exist in any intersection point of the discontinuity surface it is necessary that the equation of the equivalent control method for the system (2.2), (2.3)

$$s = Gf + GBu_{\text{eq}} = 0$$

has a solution for u_{eq} (recall that G is an $m \times n$ dimensional matrix whose rows are gradients of the components s_i of the vector s) and each of the components of the equivalent control satisfies the condition

$$\min (u_i^+, u_i^-) \leqslant u_{i\,\text{eq}} \leqslant \max (u_i^+, u_i^-) \tag{3.3}$$

The first condition has been proved in Sec. 5, Ch. 1 where various singular cases were discussed that arise if $\det GB = 0$. Using approximately the same reasoning the second condition, (3.3), also can be verified. By the definition of a sliding mode the question, whether it exists or not, is answered by using the sublimit system (2.8) with nonidealities of form (3.1), (3.2). Assume that at least one of the inequalities in (3.3) is violated but a sliding mode does exist in the point x_0. Since $\dot{s}$ is zero only with $u = u_{\text{eq}}$ and the real control $\tilde{u}$ varying in compliance with (3.1) and (3.2) is never equal to u_{eq} under our assumption, the vector $\dot{s}$ is nonzero

$$\dot{s} = G(f + B\tilde{u}) \neq 0$$

Integrating this relation over the interval Δt gives

$$\| s(\Delta t) - s(0) \| \geqslant \min_{\tilde{u}} \| \int_0^{\Delta t} G^0 (f^0 + B^0 \tilde{u})\, dt \| + O(\Delta t)$$

where G^0, f^0, B^0 are values of the matrices G, f and B at the initial time with $x = x_0$ and $O(\Delta t)$ is a second-order infinitesimal.

In this inequality the right-hand side is minimized with respect to $\tilde{u}$ from the range of values (3.2). Since the integrand is nonzero, there is a finite time interval Δt such that the norm of increment of the vector s over this interval exceeds some finite value proportional to Δt. This conclusion contradicts the definition of a sliding mode according to which a system with nonidealities exists such that its state trajectories are in any vicinity, as small as desired, of the intersection manifold. The very fact of contradiction indicates that the assumption that a sliding mode can exist if condition (3.3) is violated does not hold and, consequently, these conditions are necessary.

Sec. 2. Application of Lyapunov's Second Method to Determine the Domain of a Sliding Mode

We have just found that the problem of determining the sliding domain is reducible to the specific problem of stability of a nonlinear system. As usually is done in theory of stability, let us try to find conditions sufficient for a certain domain S on the intersection of discontinuity surfaces in the state space of the system (2.2), (2.3) to be a sliding domain in the sense of the definition of Sec. 1. This problem should be specifically studied because of the discontinuity of the right side of the idealized system (2.2), (2.3) or by the fact of the indeterminedness of the real control in system (2.8) which is given with respect to nonidealities in a certain vicinity of the discontinuity surfaces (3.1), (3.2). Another specific feature is that stability is needed for the projection of the motion on the subspace $s_1, \ldots, s_m$ rather than of the overall motion and it may be found that for one domain of the space $x_1, \ldots, x_n$ these projections are stable and for the other are not. Now formulate the sufficient conditions recognizing these features and leading to the sliding domain as a theorem.

Theorem. *For the domain $S(x, t)$ on the intersection of discontinuity surfaces of the system* (2.2), (2.3) *to be a sliding one it is sufficient that for all x belonging to this domain there exists in a certain area Ω of the subspace $s_1, \ldots, s_m$ containing the origin of coordinates, a function $v(s, x, t)$ continuously differentiable with respect to all its arguments such that the following conditions are valid.*

1. *This function is positive definite with respect to s, i.e.* $v(s, x, t) > 0$ *with* $s \neq 0$ *and arbitrary* x *and* t, $v(0, x, t) \equiv 0$; *on the sphere* $\| s \| \leqslant R$ *for all* x *from the region and any* t *the relations*

$$\inf_{\|s\|=R} v = h_R, \quad \sup_{\|s\|=R} v = H_R, \quad R \neq 0 \tag{3.4}$$

where h_R *and* H_R *are some positive quantities depending only on* R.

2. *A total time derivative of the function* v *is, by virtue of the system* (2.2), (2.3)

$$\dot{v} = \operatorname{grad}_s v\,(Gf + GBu) + \operatorname{grad}_x v\,(f + Bu) + \frac{\partial v}{\partial t}$$

$$\operatorname{grad}_s v = \left(\frac{\partial v}{\partial s_1}, \ldots, \frac{\partial v}{\partial s_m}\right)$$

$$\operatorname{grad}_x v = \left(\frac{\partial v}{\partial x_1}, \ldots, \frac{\partial v}{\partial x_n}\right)$$

is negative everywhere, except the discontinuity surfaces, on which this function is not defined, and on the entire surface of the sphere $\| s \| = R$ *with the exception of the discontinuity points, it has the position correlation*

$$\sup_{\|s\|=R} \dot{v} = -m_R, \quad m_R = \text{const}, \quad m_R > 0 \tag{3.5}$$

is true.

The upper bound for the function $\dot{v}$ is sought for all x from the domain and any t and the quantity m_R is positive and depends only on R. If for the function $\dot{v}$ (3.5) is true, then in further discussion it will be referred to as negative definite.

To prove the theorem we will have to compute $\dot{v}$ for the idealized system (2.2), (2.3) which can be represented in the form

$$\dot{v} = G_0(s, x, t) + \sum_{i=1}^{m} G_i(s, x, t)\, u_i \tag{3.6}$$

where $G_0, G_1, \ldots, G_m$ are certain functions continuous with respect to all arguments and depending on f, B, G, $\operatorname{grad}_s v$, $\operatorname{grad}_x v$ and $\frac{\partial v}{\partial t}$.

Let us take up an arbitrary point x_0 on one or several discontinuity surfaces, e.g. $s_i = 0\ (i = 1, \ldots, k,\ k < m)$ and on the sphere $\| s \| < R$. Although the function $\dot{v}$ is not defined in this point, let us compute it formally by selecting the values of $u_{k+1}, \ldots, u_m$ in compliance with (2.3) and substituting for $u_i (i = 1, \ldots, k)$ either u_i^+ or u_i^-:

$$\dot{v}(x_0) = G_0(s, x_0, t) + \sum_{i=1}^{k} G_i(s, x_0, t)\, u_i^{\pm} + \\ + \sum_{i=k+1}^{m} G_i(s, x_0, t)\, u_i \tag{3.7}$$

where $u_i^{\pm}$ denotes either u_i^+ or u_i^-. Note that in (3.7) the components $s_1, \ldots, s_k$ of the vector s are zero. Since all the functions G_i, u_i^+ and u_i^- are continuous and the condition (3.5) holds for the function $\dot{v}(x_0)$, the estimate

$$\dot{v}(x_0) \leqslant -m_R \tag{3.8}$$

is valid with any combinations of the values of $u_i (i = 1, \ldots, k)$.

Let us now consider the function $\dot{v}$ along the trajectories of the system with nonidealities (2.8) which was used in definition of the sliding mode. If the trajectories of this system go outside the Δ_0-vicinity of discontinuity surfaces, then by virtue of (3.1) the values of $\dot{v}$ for an idealized system and a system with nonidealities are the same. Evidently for all points of the sphere $\| s \| < R$, except the Δ_0-vicinities of discontinuity surfaces, the function $\dot{v}$ for the system with nonidealities does not exceed $-m_R$ by virtue of condition 2 of the Theorem. Inside the Δ_0-vicinity of the intersection of the surfaces $s_i = 0\ (i = 1, \ldots, k)$, the function $\dot{v}$ for the system (2.8), (3.1), (3.2) can be represented in the form

$$\dot{v}(x) = \dot{v}_0 + O(\Delta_0)$$

$$\dot{v}_0 = G_0(s, x_0, t) + \sum_{i=1}^{k} G_i(s, x_0, t)\, \tilde{u}_i + \\ + \sum_{i=k+1}^{m} G_i(s, x_0, t)\, u_i \tag{3.9}$$

where x_0 is the point on the intersection of the surfaces $s_i = 0\ (i = 1, \ldots, k)$ nearest to the one in question (the distance between the points x and x_0 is a value about Δ_0), $O(\Delta_0)$ is a value infinite-

simal with respect to Δ_0. The value of $\dot{v}(x_0)$ is estimated by the inequality (3.8) and its maximal value in the point x_0 is attained if, depending on the signs of the functions G_i, the values of u_i^+ or u_i^- for the control components $u_i (i = 1, \ldots, k)$ are selected properly. The maximal value of $\dot{v}_0$ function of $\tilde{u}_i (i = 1, \ldots, k)$ coincides with the maximal value of $\dot{v}(x_0)$ as a function of $u_i (i = 1, \ldots, k)$ because $\tilde{u}_i$ is somewhere between u_i^+ and u_i^- and is linearly represented in the function $\dot{v}(x_0)$. Consequently, $\dot{v}_0$ is also smaller than $-m_R$ and, by virtue of (3.9) for a fixed R one can always select Δ_0 such that on a sphere of radius R the function $\dot{v}(x)$ is nonpositive.

Let us use this property of a system with nonidealities and show that when the conditions of theorem are observed the domain S on the intersection of discontinuity surfaces is a sliding domain. By the definition of this domain we should verify that for any ε-vicinity of the origin of coordinates of the subspace $s_1, \ldots, s_m$ there are Δ_0- and δ-vicinities such that any motion of the system (2.8), (3.1), (3.2) starting in the σ-vicinity will stay inside the ε-vicinity.

Without loss of generality a part of the ε-vicinity can be played by a sphere $\| s \| \leqslant \varepsilon$ in the domain Ω where the conditions of the theorem hold. From the first condition it follows that the minimal value of the function v on the sphere $\| s \| = \varepsilon$ is h_ε. Select now a sphere of radius σ such that the maximal value of the function v inside it is h_ε (this can be done because the function v is zero with $s = 0$, continuous and by virtue of the theorem has upper bound on any sphere). As has been seen above, by appropriate choice of Δ_0 for the system with nonidealities one can make $\dot{v}$ nonpositive on the surface of any sphere from the domain Ω. Evidently Δ_0 can be selected such that $\dot{v}$ will be nonpositive between the spheres $\| s \| = \delta$ and $\| s \| = \varepsilon$. Now let us consider an arbitrary motion with this value of Δ_0 starting in the sphere $\| s \| \leqslant \delta$. As soon as the describing point leaves this sphere, the function v will be found to be nonincreasing or will not exceed h_ε. But the value of the function v on the sphere $\| s \| = \varepsilon$ is larger than or equal to h_ε. Consequently, for all x the trajectories starting in the δ-vicinity of the origin of coordinates of the subspace $(s_1, \ldots, s_m)$ cannot leave the ε-vicinity. This proves the theorem.

These sufficient conditions make it possible to find the sliding domain using the idealized system (2.2), (2.3) and treating its

behaviour outside the discontinuity surfaces, or outside the points where this system is not defined. An important point is that the system with nonidealities (2.8), (3.1), (3.3) is not needed. (In terms of this system the domain of sliding motion was defined and this system was not defined unambiguously in a certain vicinity of discontinuity surfaces.)

Now a few brief remarks on the conditions of the theorem and their verification. In the case where the function v is time-invariant and the domain S is bounded and closed, the condition (3.4) holds everywhere. This follows from the fact that any continuous function on a closed set always reaches its upper and lower bounds and, since the function v vanishes only with $s = 0$, then on a sphere of nonzero radius the lower bound is positive. The condition (3.4) holds everywhere if the function v depends only on s. As for the condition (3.5) for the function $\dot{v}$, even if this function were independent of x and t, on the sphere $\| s \| = R$ the value of m_R may be equal to zero. The reason for this is that $\dot{v}$ is estimated in an open domain whereas on the sphere $\| s \| = R$ we left out the points which belong to the discontinuity surfaces. We note that if the function $\dot{v}$ is negative definite, then $\lim \dot{v} \neq 0$ with any combination of but not all s_i tending to zero.

In conclusion we will give two examples to show that the requirement of continuous differentiability is important for finding the condition for a sliding mode to exist. In both examples the function v is piecewise smooth positive definite with respect to s. A total time derivative of this function will be negative everywhere, except the discontinuity surfaces but in the former case there is a sliding mode on the intersection of the discontinuity surfaces and in the latter one, there is none.

To illustrate the first example let us use the system of Sec. 1 with a two-dimensional control; the motion projection on the plane s_1, s_2 is described by the equation

$$\dot{s}_1 = -\text{sign } s_1 + 2 \text{ sign } s_2$$

$$\dot{s}_2 = -2 \text{ sign } s_1 - \text{sign } s_2$$

Select a positive definite function v in the form

$$v = | s_1 | + | s_2 |$$

The derivative of this function with respect to both arguments has discontinuities when either becomes zero. The value of $\dot{v}$ computed along the system trajectories

$$\dot{v} = \frac{\partial v}{\partial s_1}\dot{s}_1 + \frac{\partial v}{\partial s_2}\dot{s}_2 = \operatorname{sign} s_1 (-\operatorname{sign} s_1 + 2 \operatorname{sign} s_2) +$$

$$+ \operatorname{sign} s_2 (-2 \operatorname{sign} s_1 - \operatorname{sign} s_2) = -2$$

is negative everywhere except the discontinuity surfaces where this function is not defined. Consequently, the functions v and $\dot{v}$ have thus opposite signs and from studying the state portrait of the system (Fig. 11) it follows that the system is indeed stable, or that a sliding mode does exist on the discontinuity surface. Before trying to find how these facts are interconnected, take up the second example of a system with two-dimensional control whose motion projection on a plane $s_1 s_2$ is described by the equations

$$\dot{s}_1 = -2 \operatorname{sign} s_1 - \operatorname{sign} s_2$$

$$\dot{s}_2 = -2 \operatorname{sign} s_1 + \operatorname{sign} s_2$$

Let the positive definite function

$$v = 4 | s_1 | + | s_2 |$$

be the function v. The time derivative of that function

$$\dot{v} = \frac{\partial v}{\partial s_1}\dot{s}_1 + \frac{\partial v}{\partial s_2}\dot{s}_2 = -7 - 6 \operatorname{sign} s_1 s_2$$

is negative everywhere except the discontinuity surfaces. But from direct study of the state portrait of the system (Fig. 12) it is seen that despite the difference in signs of the functions v and $\dot{v}$ the describing point moving from any initial position reaches the plane $s_1 = 0$ and moves along it in sliding mode from the intersection of discontinuity surfaces $s_1 = 0$ and $s_2 = 0$*. This implies that no sliding mode occurs at this intersection. In our example the state trajectories intersect the

* The state velocity vector is found in the following way when a sliding mode starts along the surface $s_1 = 0$. Following the equivalent control method find sign s_1 from the equation $\dot{s}_1 = 0$ and substitute it into the second equation. This results in a sliding equation $\dot{s}_2 = 2 \operatorname{sign} s_2$ which shows that the absolute value of s_2 always increases.

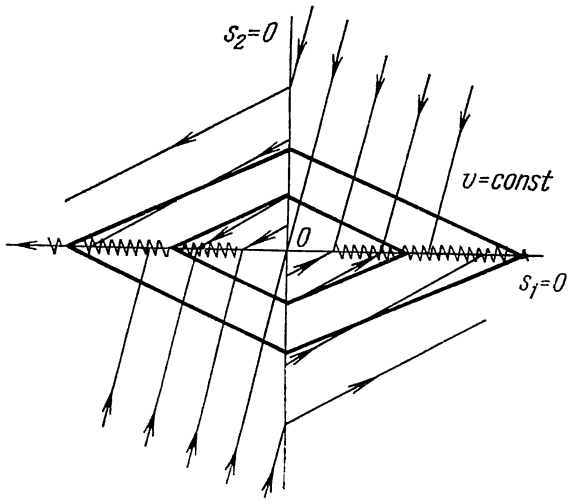

FIG. 12

equipotential surfaces (v = const) from the outside everywhere except the "angular points" but the trajectories of a sliding mode diverge "through angular points". In the first example no sliding mode along one of the surfaces arises; in other words, the set of points on the trajectories which were on the "angles" of the equipotential surfaces were of zero measure. It is for this reason that the difference in signs of the functions v and $\dot{v}$ led to the conclusion that the origin of coordinates on the plane s_1, s_2 was stable. As the second example shows, the knowledge of signs of the piecewise differentiable function and its derivative is not sufficient to ascertain that a sliding mode does exist.

We thus have considered the conditions to be satisfied with a function, analogous to the Lyapunov function, which can be used to find the sliding domain. What is important is that these conditions are found through the analysis of the behaviour of an idealized system outside the discontinuity surfaces although the definition of a sliding domain was given in terms of the system with nonidealities. In Ch. I the equivalent control method was similarly employed to find the sliding equations through the use of equations for an idealized system alone. Of course neither this method nor the method of Lyapunov's functions gives any specific recipe for making a function v for some discontinuous system. Therefore, in subsequent sections we

will consider those cases where the function v satisfying the conditions of the theorem can be found.

Sec. 3. Using Quadratic Forms for Finding the Sliding Domain

Also for a dynamic system with discontinuous control functions (2.2), (2.3) it is required to find the sliding domain on the intersection of discontinuity surfaces. Let us write equations describing the motion projection on an m-dimensional space whose axes represent the quantities $s_1, \ldots, s_m$ characterizing the distances to discontinuity surfaces

$$\dot{s} = G(x) f(x, t) + G(x) B(x, t) u \tag{3.10}$$

where G is an $m \times n$-dimensional matrix whose rows are gradients of the functions $s_1(x), \ldots, s_m(x)$; the vectors x, f and u and the matrix B determine the motion of the system in compliance with (2.2), (2.3).

The control vector u is represented in the form*

$$u = u^0 + U \operatorname{sign} s \tag{3.11}$$

where $u^0 = \frac{1}{2}(u^+ + u^-)$, u^+ and u^- are column vectors with elements $(u_1^+, \ldots, u_m^+)$ and $(u_1^-, \ldots, u_m^-)$, U is an m-dimensional diagonal matrix with elements $U_i = \frac{u_i^+ - u_i^-}{2}$, sign s is an m-dimensional vector with elements sign s_i, the function sign s_i is defined everywhere except $s_i = 0$ and is equal to $+1$ with $s_i > 0$ and to -1 with $s_i < 0$. Now rearrange the system (3.10) in compliance with this notation

$$\dot{s} = D(x, t) \operatorname{sign} s + d(x, t) \tag{3.12}$$

where the matrix $D(x, t)$ and the vector $d(x, t)$ are equal to GBU and $Gf + GBu^0$. In further study of the onset of a sliding mode the system (3.12) will be used instead of (3.10). It should be remembered that with replacement of the ideal control function (2.3) with a real one (3.1), (3.2) in the system

* This representation for variable structure scalar control systems was termed quasilinear in [19].

(3.11), the components of the vector sign s in the Δ_0-vicinity of the associated discontinuity surface should be replaced by $\frac{\widetilde{u}_i - u_i^0}{U_i}$. Since the magnitude of these components is not larger than one, the conditions (3.1), (3.2) apply to them as the conditions do to components of the vector $\widetilde{u}$. All the methods proposed in this chapter for studying sliding motions are equally applicable to systems with nonidealities of this very type; therefore they also can be applied to the system (3.12).

In this section those cases will be treated where the sliding domain S on the intersection of m discontinuity surfaces can be found by making the function v as a quadratic form with respect to $s_1, \ldots, s_m$ both with constant and x- and t-dependent coefficients.

Quadratic Forms with Constant Coefficients. Let us make the function v positive definite quadratic form

$$v = \frac{1}{2} s^T W s \tag{3.13}$$

where W is a symmetric matrix with constant coefficients which satisfies the Silvester criterion, T is a transposition symbol. Since the function v is not explicitly dependent on x and t, the first condition of the thereom in Sec. 2 holds for it. Determine the time derivative of this function along the trajectories of the system (3.12) in all points except the discontinuity surfaces

$$\dot{v} = -s^T L \operatorname{sign} s + s^T l \tag{3.14}$$

where $L = -WD$, $l = Wd$. The matrix L and the vector l depend on x and t. Should we find a range of values for the elements of L and l for which the function $\dot{v}$ is negative definite in the sense of the second condition of the theorem and the set of the values of the vector x, associated with these values, then the sliding domain will be found.

Let us now show that the inequalities

$$l_{kk} > \sum_{\substack{i=1 \\ i \neq k}}^{m} |l_{ki}| + |l_k| \quad (k = 1, \ldots, m) \tag{3.15}$$

are the necessary and sufficient conditions for the function $\dot{v}$ with constant coefficients in L and l to be negative definite.

In (3.15) l_{ki} are elements of the k-th row of the matrix L, l_k is the k-th component of the vector l. To show that this condition is sufficient to represent the function $\dot{v}$ in the form

$$\dot{v} = -\sum_{k=1}^{m} |s_k| \left(l_{kk} + \sum_{\substack{i=1 \\ i \neq k}}^{m} l_{ki} \operatorname{sign} s_k s_i - l_k \operatorname{sign} s_k \right)$$

With the inequalities (3.15) true, the expressions in parenthesis in each addend are positive and the function $\dot{v}$ is thus negative. The upper bound of the function $\dot{v}$ on the entire sphere $\| s \| = R$, except the discontinuity surfaces, is equal to

$$\sup_{\|s\|=R} \dot{v} = -m_R = -\| s \| \Delta l'_r$$

where $\Delta l'_r$ is the minimal number of all $\Delta l'_k = l_{kk} - \sum_{\substack{i=1 \\ i \neq k}}^{m} |l_{ki}| - |l_k|$ $(k = 1, \ldots, m)$, and if $\lim |s_r| = \|s\|$, $\lim s_i = 0$ $(i = 1, \ldots, m, i \neq r)$, $\operatorname{sign} s_r = \operatorname{sign} l_r$, $\operatorname{sign} s_i = -\operatorname{sign} l_r l_{ri}$ $(i = 1, \ldots, m, i \neq r)$. (Recall that the upper bound is not reached here because the function $\dot{v}$ on the discontinuity surfaces $s_i = 0$ is not defined and we deal with an open domain on the sphere.)

If in just one of inequalities (3.15) the inequality sign is inversed or replaced by the equality sign, the value of $\Delta l'_r$ will be either negative or zero. Consequently, the upper bound of the function $\dot{v}$ will be found to be nonnegative, a fact which proves that the conditions (3.15) are necessary for this function to be negative definite.

In the time derivative of the function v the matrix L and the vector l depend on x and t. Therefore the condition for this function to be negative definite leads to time-varying domain S of the values of x such that with any t the inequalities

$$\inf_{x \in S,\ t \in [0,\infty)} \left(l_{kk}(x, W, t) - \sum_{\substack{i=1 \\ i \neq k}}^{m} |l_{ki}(x, W, t)| - |l_k(x, W, t)| \right) > \Delta l_k > 0 \tag{3.16}$$

with $\Delta l_k = \text{const}$, $k = 1, \ldots, m$.

For the domain S on the set of points of the sphere $\| s \| = R$ except the discontinuity surfaces the upper bound of the function $\dot{v}$ does not exceed

$$\sup_{\| s \| = R} \dot{v} = -\| s \| \Delta l_r \tag{3.17}$$

where Δl_r is a minimal value of all Δl_k; in other words, in the domain S the second condition of the theorem of Sec. 2 holds. This implies that the domain S for which the conditions (3.16) hold is a sliding domain on the intersection of discontinuity surfaces. Note that the points that we are interested in stay on the manifold $s_i = 0$ $(i = 1, \ldots, m)$; therefore in looking for the sliding domain with the conditions (3.16) satisfied, some m coordinates of the vector x should be found as functions of the other $n - m$ ones* and the resultant values should be substituted into the left-hand sides of the inequalities (3.16). As for the matrix W, this can be selected at will provided that its diagonal determinants are positive in compliance with the Silvester criterion.

Let us give an example of using this approach to determine the sliding domain in a system, linear with respect to x and u, with discontinuous three-dimensional control and described by the equations

$$\dot{x} = Ax + Bu$$

where x is an n-dimensional vector, A and B are constant $n \times n$ and $n \times 3$-dimensional matrices, each of the control components being of the form

$$u_i = \operatorname{sign} s_i \, (i = 1, 2, 3)$$

The discontinuity surfaces are planes, i.e. the vector s

$$s = Cx$$

where C is a constant $3 \times n$-dimensional matrix and, consequently, for this system the matrix of gradients is equal to C. In this case the elements defining equation (3.12) are of the form

$$u^0 = 0, \; U = I_3, \; d = CAx$$

---

* In Sec. 2 of Ch. I it was noted that for the discontinuous system in question this can always be done.

Assume that coefficients of the matrix D equal to CB take the following numerical values

$$D = -\begin{pmatrix} 1 & 0.8 & 0.5 \\ 0.6 & 1.5 & 1 \\ 0.6 & 1 & 1 \end{pmatrix}$$

Bearing in mind the symmetry of the matrix W and computing the matrix L and the vector l through (3.14) write for our system the inequalities (3.16) defining the sliding domain

$$w_{11} + 0.6\, w_{12} + 0.6\, w_{13} > | 0.8\, w_{11} + 1.5\, w_{12} + w_{13} | +$$
$$+ | 0.5\, w_{11} + w_{12} + w_{13} | + | l_1(x, W) |$$
$$0.8\, w_{12} + 1.5\, w_{12} + w_{13} > | w_{12} + 0.6\, w_{22} + 0.6\, w_{23} | +$$
$$+ | 0.5\, w_{12} + w_{22} + w_{23} | + | l_2(x, W) |$$
$$0.5\, w_{13} + w_{23} + w_{33} > | w_{13} + 0.6\, w_{23} + 0.6\, w_{33} | +$$
$$+ | 0.8\, w_{13} + 1.5\, w_{23} + w_{33} | + | l_3(x, W) |$$

The elements $l_1(x, W), l_2(x, W), l_3(x, W)$ are linear combinations of system coordinates with coefficients depending on the matrices CAx and W. The above inequalities with numerical values of the matrix W

$$w_{11} = 3,\ w_{12} = -1,\ w_{13} = -1,\ w_{22} = 2,\ w_{23} = -1,\ w_{33} = 3$$

are of the form

$$| l_1(x, W) | < 1.2,\ | l_2(x, W) | < 0.3,\ | l_3(x, W) | < 0.6 \qquad (3.18)$$

For the selected values of w_{ij} one can write coefficients of linear forms l_1, l_2, l_3 that are equal to zero with $x = 0$. It is evident that in the space $x_1, \ldots, x_n$ there will be an area containing the origin of coordinates in which inequalities (3.18) are valid. Since all diagonal determinants of the matrix

$$W = \begin{pmatrix} 3 & -1 & -1 \\ -1 & 2 & -1 \\ -1 & -1 & 3 \end{pmatrix}$$

are positive, the set of points from this area on the intersection of sliding surfaces is the sliding domain. In finding the sliding domain we selected the coefficients of the matrix W at which

the functions v and $\dot{v}$ were found to be positive definite and negative definite, respectively. This is not a unique solution and so it would be of interest to consider a problem which we will merely formulate: from all possible matrices find a matrix W such that the domain in which a sliding mode will certainly exist will be maximal; note here that all sliding domains found for various matrices W will also make a sliding domain and another, more general problem is that of finding a set of matrices W and an associated set x such that the functions v and $\dot{v}$ are of different signs on this set and then of finding a sliding domain as a sum of all such sets x. These problems are obviously solvable only in the case where at least one solution exists; the existence of such a solution of the applicability range of this approach will be discussed for a simplest discontinuous system described in the subspace $s_1, \ldots, s_m$ by the equations

$$\dot{s} = D \operatorname{sign} s + d(x, t), \quad D = \text{const} \tag{3.19}$$

Let us first consider the case where $d(x, t) = 0$. For linear systems with constant parameters a standard way of designing Lyapunov's functions has been developed whereby the stability can be adjudged (we have found above that the existence problem for sliding modes is in its essence very much akin to the stability problem). In this approach a function $\dot{v}$ of constant sign is first selected and knowing this function the function v is restored. If the sign of the function v is opposite to that of $\dot{v}$, the system is stable, if not, unstable [9]. Unfortunately, this approach may prove impracticable in the discontinuous functions of our interest.

To illustrate this fact, take up this system

$$\left.\begin{aligned} \dot{s}_1 &= -\operatorname{sign} s_1 + 2 \operatorname{sign} s_2 \\ \dot{s}_2 &= -2 \operatorname{sign} s_1 - \operatorname{sign} s_2 \end{aligned}\right\}$$

for which in Sec. 1 it was shown with the use of a state plane (Fig. 11) that at the intersection of discontinuity surfaces $s_1 = 0$, $s_2 = 0$ there is always a sliding mode. Let us now verify that with any constant matrix W the derivative $\dot{v} = -s^T L \operatorname{sign} s$ of the quadratic form $v = \frac{1}{2} s^T W s$ (s is a two-dimensional vector with components s_1 and s_2, W is a symmetric matrix with components w_{ij}, $i, j = 1, 2$) cannot be

negative definite. The coefficients of the matrix L equal to $-WD$ should satisfy the relations (3.15) which for our example are of the form

$$w_{11} + 2w_{12} > |2w_{11} - w_{12}|$$
$$w_{22} - 2w_{12} > |w_{12} + 2w_{22}|$$

The first inequality cannot be true with $w_{12} \leqslant 0$ because with $w_{11} < 0$ its left-hand side is negative and with $w_{11} > 0$ the left-hand side is smaller than w_{11} and the right-hand side is larger than $2w_{11}$. In a similar way it is proved that with $w_{12} \geqslant 0$ the second inequality is invariably disturbed. Consequently, the application of the function v as a quadratic form cannot answer the question whether a sliding mode exists in this particular case.

In the general case of a discontinuous system with a constant matrix D the feasibility of using the quadratic forms applied so extensively in stability studies of linear systems is ascertained by finding a class of matrices D for which there are matrices W and L such that $L = -DW$, the matrix W is symmetric and in the matrix L the diagonal elements exceed the sum of magnitudes of elements in the associated row. We will describe two cases of systems for which this problem can be solved.

Let in the matrix D each of the diagonal elements be negative and its absolute value exceed the sum of magnitudes of elements in the appropriate row, or

$$-d_{kk} > \sum_{\substack{i=1 \\ i \neq k}}^{m} |d_{ki}| \quad (k = 1, \ldots, m) \tag{3.20}$$

Then the matrix W will be made equal to an identity and it is evident that for the matrix L equal to $-D$ the conditions (3.15) hold (the components l_k of the vector l with $d = 0$ are also equal to zero). Consequently, all the intersection of the discontinuity surfaces is a sliding domain. Note that this case is easily explainable as far as the condition for a sliding mode to exist in systems with scalar control is concerned. In the vicinity of the k-th discontinuity surface s_k and its derivative which for the case of $d(x, t) = 0$ is $d_{kk} \operatorname{sign} s_k + \sum_{\substack{i=1 \\ i \neq k}}^{m} \alpha_{ik} \operatorname{sign} s_i$ have different signs provided the inequality condition (3.20)

holds. This implies that at each of the discontinuity surfaces a sliding mode exists and the describing point moves along their intersection. If, however, in equation (3.19) the vector $d(x, t)$ is other than zero, then the sliding mode will certainly exist not on the entire intersection of discontinuity surfaces but only in the domain S defined by the conditions (3.16) which for this particular case ($W = I_m$) are of the form

$$-d_{kk} > \sum_{\substack{i=1 \\ i \neq k}}^{m} |d_{ki}| + \sup_{x \in S,\, t \in [0, \infty)} |d_k(x, t)|$$

$$(k = 1, \ldots, m) \tag{3.21}$$

Assume now that the matrix D is symmetric and there exists its inverse D^{-1}, which also is symmetric. Select for this case a symmetric matrix of the coefficients W in the quadratic form $v = \frac{1}{2} s^T W s$ which is equal to $-D^{-1}$. Then the matrix L defining the derivative of the function v in the form $-s^T L \times \times \operatorname{sign} s$ is, by virtue of (3.14), equal to an identity matrix and consequently $\dot{v}$ is a negative definite function. This implies that if the matrix $-D$ is symmetric and satisfies the Silvester criterion, or the quadratic form v is positive definite*, then on the manifold of intersection of discontinuity surfaces a sliding mode exists. Should the function v be sign-variable, in any point of that intersection the sliding mode is out of the question. Indeed, in any vicinity of the origin of coordinates of the subspace $s_1, \ldots, s_m$ there is a point in which the signs of v and $\dot{v}$ coincide, the magnitude of v will increase and the describing point will leave the vicinity of the intersection surfaces. (This fact can be proved in stringent terms following the reasoning used in proving the theorem of Sec. 2.) If thus the matrix D in (3.19) is symmetric, the fact that the inequalities of the Silvester criterion hold for the matrix $-D$ is a sufficient condition for a sliding mode to exist. Leaving out the cases where the function v is a semidefinite quadratic form, the validity of these inequalities is also the necessary condition.

* An obvious assertion will not be proved here that if the matrix $-D$ is symmetric and satisfies the Silvester criterion, then the inverse matrix also has this property.

Concluding this section, let us consider the problem of finding a sliding domain for the system (3.18) with the matrix $-D$ symmetric and satisfying the Silvester criterion and a nonzero vector depending on x and t. Select, as before, the function v as a positive definite quadratic form $\frac{1}{2} s^T W s$, $W = -D^{-1}$ and the derivative of this function is, by virtue of the system (3.19)

$$\dot{v} = -s^T \operatorname{sign} s + s^T l, \; l = Wd(x, t) = -D^{-1}d(x, t)$$

The condition (3.16) by virtue of which this function is negative definite derives the sliding domain S

$$\sup_{\substack{x \in S \\ t \in [0, \infty)}} |l_k(x, t)| < 1 \quad (k = 1, \ldots, m) \tag{3.22}$$

Of course, these conditions are only sufficient and do not demonstrate the existence or otherwise of sliding outside the domain specified by the inequalities (3.22)

Quadratic Forms with Coefficients Depending on the State Vector and Time-Dependent Coefficients. In dealing with discontinuous systems with a constant matrix in equation (3.19) we have shown that for a symmetric matrix the sliding region is found by using an approach developed in stability theory for linear systems with constant parameters. Initially a negative definite function $\dot{v}$ is selected and the knowledge of this leads to the function v proper. The sign of the resultant system parameter-dependent function v determined the stability of the system. The constant-parameter approach cannot, however, be applied to linear systems with variable parameters because the function v should be time-varying. Its derivative should contain partial time derivatives and the problem of restoring the coefficients of the function v is no longer reducible to the solution of a system of algebraic equations. What makes discontinuous systems different from other systems is that the quadratic form acting as the function v is applied independently of whether the matrix D is constant or depends on the time t and the state vector x. This important property (whose importance is evident because even in a time-invariant system (2.2) the matrix D may vary because it depends on x) will be formulated as a theorem for the discontinuous system (3.12).

Theorem. *If for a certain domain S on the intersection of discontinuity surfaces and with any t there are matrices $W(x, t)$, $L(x, t)$ and the vector $l(x, t)$ such that $L = -WD$ and $l = Wd$ and the following conditions hold:*

(1) *$W = W^T$, all principal minors of that matrix are positive and have upper and lower bounds;*

(2) *for elements of the matrix L and the vector l the conditions* (3.16) *hold;*

(3) *the norm of the time derivative of the matrix W is bounded by a certain number M, then the domain S is a sliding domain.*

Proof. From the first condition, it follows that for the quadratic form $v = \frac{1}{2} s^T W(x, t) s$ the inequality (3.4) from the theorem on the existence of a sliding mode given in Sec. 2 holds. The second condition implies that the function $v_0 = -s^T L \operatorname{sign} s + s^T l$ is negative definite on the surface of any sphere of radius $\| s \|$ and its upper bound in compliance with (3.17) is

$$\sup_{\| s \| = \text{const}} v_0 = - \| s \| \Delta l_r \tag{3.23}$$

Now let us take up the time derivative of the function v bearing in mind that $L = -WD$ and $l = Wd$

$$\dot{v} = - v_0 + s^T \dot{W} s$$

In compliance with the third condition and the relation (3.23), the estimate for the upper bound of the function $\dot{v}$ on a sphere of radius $\| s \|$ is

$$\sup_{\| s \| = \text{const}} \dot{v} \leqslant - \| s \| \Delta l_r + \| s \|^2 M$$

Because the first addend is proportional to $\| s \|$ and the second one to $\| s \|^2$, there is always a vicinity of the origin of coordinates inside which on any sphere the lower bound of the function v is negative. This implies that the second condition (3.5) from the Theorem of Sec. 2 holds and, consequently, the domain S is a sliding domain.

The basic result of the Theorem is that if the domain S is a sliding domain for all fixed values of the matrix D and the vector d from a certain range and this fact is confirmed by the function v as a quadratic form whose coefficients depend on D and d, then the domain S remains a sliding one even with

arbitrary change of the elements of D and d in the range under study provided that $\| \dot{W} \|$ is bounded. This conclusion essentially rationalizes the applicability of the so-called method of "frozen coefficients" in finding the sliding domain in discontinuous systems with the use of quadratic forms.

Therefore the conditions for the sliding domain to exist in the system (3.19) can be easily reformulated. For $d(x, t) = 0$, $D(x, t) = D^T(x, t)$ the domain S is a sliding domain if all principal minors of the matrix $-D^{-1}$ have positive upper and lower bounds and the norm of $\frac{d}{dt} D^{-1}$ is bound for all x from this domain. In the case where $d(x, t)$ is other than zero, the sliding domain is still delineated by inequalities (3.22).

As for the system with a dominating diagonal in the matrix D in compliance with (3.20), there is no need to apply the above theorem because the matrix W was selected constant and equal to the identity one (or $\dot{W} = 0$). Therefore to obtain the sliding domain S one should only rearrange the inequalities (3.21) for the matrix $D(x, t)$ dependent on time and the system state:

$$\inf_{\substack{x \in S \\ t \in [0, \infty)}} \left(- d_{kk}(x, t) - \sum_{\substack{i=1 \\ i \neq k}}^{m} | d_{ki}(x, t) | - | d_k(x, t) |\right) > 0 \quad (3.24)$$

Note finally that there is one more subclass of the matrices $D(x, t)$ for which the sliding domain can be found with the use of quadratic forms. Take up the system (3.12) again and assume that there is a diagonal matrix $\Lambda(x, t)$ for which in a certain domain S on the intersection of discontinuity surfaces the relations hold

$$\left.\begin{array}{ll} \inf\limits_{t \in [0, \infty)} \lambda_i(x, t) > 0 & | \lambda_i(x, t) | < M \\ & (M = \text{const}, \ i = 1, \ldots, m) \\ \Lambda D = D^T \Lambda = D^*, & \sup\limits_{t \in [0, \infty)} | l_k | < 1 \quad (k = 1, \ldots, m) \end{array}\right\} \quad (3.25)$$

where $\lambda_i(x, t)$ are elements of the matrix $\Lambda(x, t)$; l_k are elements of the vector $-D^{-1} d(x, t)$ and the quadratic form $v = -\frac{1}{2} s^T (D^*)^{-1} s$ satisfies the conditions (3.4). Under these conditions the domain S is a sliding domain.

This contention leads to the sliding domain if the matrix $D(x, t)$ in (3.12) is not systematic, but can be made such if multiplied by a diagonal matrix with positive elements. For proof consider the behaviour of the system in a subspace represented by the vector s^* which is related to the vector s by the nonsingular transformation

$$s^* = \Lambda(x, t)s$$

Since in the domain S the condition $\inf_{t \in [0, \infty)} \lambda_i(x, t) > 0$ holds, the fact that a sliding mode exists in this domain in the subspace s^* proves its existence in the subspace s as well.

Replace (3.12) with an equation of motion in the new subspace bearing in mind that sign s = sign s^* (because $\lambda_i(x, t) > 0$):

$$\dot{s}^* = D^*(x, t) \text{ sign } s^* + \Lambda(x, t)\, d(x, t) + \dot{\Lambda}(x, t)s$$

In this system the matrix $D^*(x, t)$ is symmetric and the quadratic form $-\frac{1}{2} s^T (D^*)^{-1} s$ satisfies the first condition of the Theorem in Sec. 2; we have just studied this case and what remains to be proved is that in the domain S the conditions

$$\sup_{t \in [0, \infty)} |l_k^*| < 1 \quad (k = 1, \ldots, m) \tag{3.26}$$

hold which are similar to (3.22) and where l_k^* are elements of the vector l^* which is determined by the relation

$$l^* = -(D^*)^{-1}(\Lambda d + \dot{\Lambda}s) = l - (D^*)^{-1}\dot{\Lambda}s$$

Let us show that these conditions follow from (3.25). Since the magnitudes $\|(D^*)^{-1}\|$ and $\|\dot{\Lambda}\|$ are bounded, $\|l - l^*\| \leqslant \gamma \|s\|$, where γ is a certain positive number, which implies that in a small vicinity of discontinuity surfaces the vectors l and l^* are close and, consequently, the upper estimate of components of the vector l^* is also smaller than unity, Q.E.D.

Let us illustrate the application of this "artificial symmetrization" method with an arbitrary order system under a two-

dimensional control; the system's motion in the subspace (s_1, s_2) is represented by the equations

$$\dot{s} = D(x, t) \operatorname{sign} s$$

where s is a vector with components s_1 and s_2, $D(x, t)$ is a 2×2 matrix. Assume that the signs of the elements $d_{12}(x, t)$ and $d_{21}(x, t)$ are the same and all the values of $d_{21}(x, t)$ are nonzero. Then select the matrix $\Lambda(x, t)$ with positive diagonal elements such as

$$\Lambda(x, t) = \begin{pmatrix} 1 & 0 \\ 0 & \frac{d_{12}}{d_{21}} \end{pmatrix}$$

The matrix $D^*(x, t)$ equal to $\Lambda(x, t)$, $D(x, t)$ is symmetric

$$D^*(x, t) = \begin{pmatrix} d_{11} & d_{12} \\ d_{12} & \frac{d_{12}}{d_{21}} d_{22} \end{pmatrix}$$

and, consequently, a sliding domain consists of the range of x where the upper and lower boundaries of the function $-d_{11}(x, t)$ and $-(d_{11}(x, t)d_{22}(x, t) - d_{12}(x, t)d_{21}(x, t))$ are strictly positive and the function $v = -\frac{1}{2} s^T (D^*)^{-1} s$ is positive definite. In the domain where any of these functions changes sign a sliding mode is out of the question as noted above.

Sec. 4. Systems with a Control Hierarchy

In this section we will deal with systems with vector discontinuous control for which the problem of finding a sliding domain is decoupled into a number of scalar problems. One of these cases was treated in Sec. 3 where it was assumed that the matrix $D(x, t)$ had a dominating diagonal. (This condition was represented by the inequalities (3.20), (3.21) or (3.24.) For systems with this property a sliding mode always exists at each of the discontinuity surfaces.

Now let us discuss another approach to deriving a sliding domain; this approach also is reduced to a sequential analysis of scalar cases but a sliding mode does not necessarily arise at each of the discontinuity surfaces.

Let a system for which the sliding domain should be found be described, as above, by equations (2.2), (2.3). Assume that at the intersection of some k discontinuity surfaces, e.g. $s_i = 0$ $(i = 1, \ldots, k, k < m)$ a sliding mode has started. Equations for this sliding motion can be obtained through the equivalent control method. First from the system of equations $\dot{s}_i = 0$ $(i = 1, \ldots, k)$ one should find $u_{i\,\mathrm{eq}}$ $(i = 1, \ldots, k)$ assuming that all the remaining components are equal to u_i^+ or u_i^- depending on the sign of $s_{k+1}, \ldots, s_m$ and then substitute the resultant value into the original system. As a result, we will have an equation of the form

$$\dot{x} = f^k(x, t) + B_k(x, t)u^k \quad (k = 0, \ldots, m) \tag{3.27}$$

where f^k is an n-dimensional vector; B_k is an $n \times m - k$ matrix with columns $b_k^{k+1}, \ldots, b_k^m$; u^k is an $(m - k)$-dimensional control vector with components $u_{k+1}, \ldots, u_m$. In equations (3.27) with $k = m$ the vector u^m is zero; if, however, $k = 0$, then $f^0 = f$, $B_0 = B$, $u^0 = u$ and the system is equivalent to the original system (2.2). Write for the system (3.27) the conditions for a sliding mode to exist on the surface $s_{k+1} = 0$ assuming that the component u_{k+1} has discontinuities on this surface and there is sliding mode on the intersection of k surfaces $s_i = 0$ $(i = 1, \ldots, k)$. In compliance with the conditions described in the introduction, a sliding mode does exist on the surface $s_{k+1} = 0$ if

$$\lim_{s_{k+1} \to +0} \dot{s}_{k+1} < 0, \quad \lim_{s_{k+1} \to -0} \dot{s}_{k+1} > 0 \tag{3.28}$$

The value of $\dot{s}_{k+1}$ in this case is given by the relation

$$\dot{s}_{k+1} = \operatorname{grad} s_{k+1} f^k + \sum_{i=k+1}^{m} \operatorname{grad} s_{k+1}\, b_k^i\, u^i \tag{3.29}$$

Let us require that the inequalities (3.28) along the trajectories of (3.27) be valid with any values of the control components

$u_{k+2}, \ldots, u_m$. In compliance with (3.29) the sliding conditions take the form

$$\left.\begin{aligned} &\operatorname{grad} s_{k+1} b_k^{k+1} u_{k+1}^{+} \\ &< \min_{u_{k+2}, \ldots, u_m} \left[- \operatorname{grad} s_{k+1} f^k - \sum_{j=2}^{m-k} \operatorname{grad} s_{k+1} b_k^{k+j} u_{k+j} \right] \\ &\operatorname{grad} s_{k+1} b_k^{k+1} u_{k+1}^{-} \\ &> \max_{u_{k+2}, \ldots, u_m} \left[- \operatorname{grad} s_{k+1} f^k - \sum_{j=2}^{m-1} \operatorname{grad} s_{k+1} b_k^{k+j} u_{k+j} \right] \end{aligned}\right\} \quad (3.30)$$

The maximal and minimal values in these inequalities denote that these are valid no matter what value, u_i^+ or u_i^-, is taken by the components of the control u_i $(i = k+2, \ldots, m)$. It should be noted that if during the motion in sliding mode along the surface $s_{k+1} = 0$ sliding arises along the surface $s_{k+l} = 0$, $(l > 1)$, then the conditions (3.30) remain valid. Actually, in this case in inequality (3.30) $u_{k+l\,\mathrm{eq}}$ should be substituted for u_{k+l} and this value in accord to the necessary condition of the existence of a sliding mode (3.3) is confined between values u_{k+l}^+ and u_{k+l}^- for which the inequalities (3.30) hold true.

If the resultant inequalities hold for a certain domain S at the intersection of the surfaces $s_i = 0$ for all k

$$0 \leqslant k \leqslant m - 1 \quad (3.31)$$

then the domain S is a sliding domain. Besides, each of the inequalities (3.30) gives a sliding domain on the associated discontinuity surface.

The relations (3.30) and (3.31) introduce a hierarchy of controls whereby the control u_1 guarantees motion in sliding mode along the surface $s_1 = 0$ for any values of $u_2, \ldots, u_m$, the second component u_2, along the intersection $s_1 = 0$ and $s_2 = 0$ with whatever values of $u_3, \ldots, u_m$ etc. What is important is that the sufficient condition represented in this way is obtained from the conditions for a sliding mode to exist for a scalar case and if a certain function $s_k \neq 0$ (or there is no sliding mode on that surface) and the describing point has reached the surface $s_{k+l} = 0$ $(l > 1)$, then a sliding mode does not necessarily

arise on that surface*. Note that the method of Sec. 3 making use of the properties of the matrix D with a dominating diagonal assumed that a sliding mode starts when the describing point reaches any of the discontinuity surfaces. In concluding this section, note also that a system with a hierarchy of control coincides with a system in which the matrix D has a dominating diagonal if the matrix GB in equation (3.10) is a diagonal matrix Q with elements $q_i(x, t)$ $(i = 1, \ldots, m)$. For this system the conditions (3.30) are of the form

$$\left.\begin{aligned} q_k u_k^+ &< -\operatorname{grad} s_k \cdot f \\ q_k u_k^- &> -\operatorname{grad} s_k \cdot f \quad (k = 1, \ldots, m) \end{aligned}\right\} \tag{3.32}$$

As in a system of the type (3.20), a sliding mode exists with the conditions (3.32) true at each of the discontinuity surfaces and the inequalities themselves derive the sliding domain on their intersection and on each of them.

* Moreover for such a situation a sliding mode would hardly start since on the surface $s_{k+l} = 0$ the control u_{k+l} has discontinuities that influence the motion less than the control u_k. Therefore for $s_k \neq 0$, the sign of $\dot{s}_{k+l}$ in the vicinity of $s_{k+l} = 0$ may remain unchanged.

Chapter IV

DESIGN

Sec. 1. Problem Statement

The main objective of this chapter is to study formal tools for investigating the sliding modes that can arise in dynamic systems described by differential equations with a discontinuous right-hand side. In this chapter which concludes part I we will discuss possible ways of using sliding modes in order to design control systems with required dynamic properties. Only basic approaches to the solution of the design problem will be shown for systems with discontinuous controls; in subsequent parts of the book these approaches will be used to solve specific control problems.

Once the system structure is selected, any design problem in the language of differential equations is reduced to finding the parameters of the controller such that the solution of the differential equation for a closed-loop system has the desired properties. As for the design of discontinuous systems, one should first find what free parameters are available and how these affect the system motion.

Take up again the system (2.2), (2.3) where the vector control is introduced linearly into the motion equation. For such a system the equations (2.6) of sliding along the discontinuity surfaces $s_i = 0$ $(i = 1, \ldots, m)$ were obtained in Chapter II by using the equivalent control method. This vector equation is essentially an equation of the $(n - m)$-th rather than n-th order since the algebraic equations $s_i = 0$ allow elimination of $(n - m)$ variables and $n - m$ equations in the system (2.6)*. In addition to reducing the order of the equation for motion

* This procedure was shown in Sec. 2 of Ch. II to be always feasible if the equation of the equivalent control method is not singular.

in sliding mode, the most important fact as far as the design is concerned, is the dependence of the sliding equations on $m \times n$ components of the vectors of gradients to m discontinuity surfaces and independence of the discontinuous control vector. The conditions for a sliding mode to exist are, however, also dependent, as shown in Ch. III, also on the position of discontinuity surfaces in the system state space and on the control vector. These properties of discontinuous systems give an outline of the design sequence.

First the surfaces and, consequently, the gradient vectors which the matrix G in sliding equation (2.6) consists of should be chosen so that motion in sliding mode satisfies the requirements for the control process. Then controls are selected with which the conditions for a sliding mode to exist hold for the entire intersection of the discontinuity surfaces and the describing point reaches this intersection from any initial position. Note that the problem of reaching differs from the problem of finding the sliding domain only in that in the space $s_1, \ldots, s_m$ the sliding domain may be obtained using the conditions for stability "in small" and the problem of reaching is reducible to the problem of stability "in large". If the reaching* time for a system designed according to the sequence is small compared to the duration of the entire control process, this process is chiefly dictated by motion in sliding mode and this motion is of a desired shape.

This design method essentially implies solution of a control problem in a class of variable structure systems; it is in these systems that the properties of sliding modes initially were used on a large scale [34, 45]. Recall that in this class one assumes the existence of several continuous systems which are referred to as structures and the design is reduced to finding both the parameters of each of them and the switching logic. Each such system with an m-dimensional control consists of 2^m continuous structures and the sequence of their change depends on the position of discontinuity surfaces in the state space.

We will not deal here with the selection of discontinuity surfaces because the right-hand side of the sliding equation

---

* In further discussion "reaching" will mean reaching the intersection of discontinuity surfaces by the describing point from any initial position.

is continuous and this is an ordinary design problem in control theory*.

The basic difficulty of the second design stage, the selection of values for u_i^+ and u_i^- $(i = 1, \ldots, m)$ components of the discontinuous control (2.3) for the vector case is that there is no universal tool which would divide the manifold of the discontinuity surfaces into areas where a sliding mode exists and where it does not exist (as was done in the scalar case). In Chapter III for various situations, sufficient conditions have been found that insure that a sliding mode exists in a certain domain at the intersection of discontinuity surfaces. Once the discontinuity surfaces are selected, the second stage of design may be performed. In subsequent sections various ways to select the control vectors which would insure some sufficient conditions for a sliding mode to exist over the entire intersection of discontinuity surfaces will be discussed.

Sec. 2. Invariance of Sliding Equations with Linear Transformation of Discontinuity Surfaces

Since the conditions for a sliding mode to exist depend on the equations of discontinuity surfaces as well as on the magnitude of discontinuous control then in selecting these surfaces the most important factor is whether there is a unique way to obtain the desired sliding equations. If the same motion in sliding mode can be obtained in different ways, then that one should be selected for which the conditions for a sliding mode to exist can be satisfied. Let us show that this ambiguity does exist. Assume that in the system (2.2), (2.3) a motion in sliding mode has started on the intersection of discontinuity surfaces $s_i(x) = 0$ $(i = 1, \ldots, m)$ of dimensionality $n - m$. This motion is described by equations (2.6). Introduce the, now generally speaking, time-varying surfaces $s_i^*(x, t) = 0$ $(i = 1, \ldots, m)$ such that their intersection coincides with that of the surfaces $s_i(x) = 0$. This coincidence will take place if

$$s^*(x, t) = \Omega(x, t)\, s(x) \tag{4.1}$$

* This problem will be shown to be of a specific nature if the parameters of the control vector are constrained and the equations of discontinuity surfaces can be chosen arbitrarily. These design problems will be discussed in Parts II and III.

where s^* and s are vectors with components s_i and $s_i^*(i = = 1,\ldots, m)$ respectively and $\Omega(x, t)$ is a nonsingular $m \times m$ matrix.

Assume that the control components have discontinuities on the surfaces $s_i^*(x, t) = 0$ and in a certain range of x and t a sliding mode starts on the manifold $s^* = 0$. If in the domain the magnitudes $\| \dot{\Omega} \|$ and $\| \Omega^{-1} \|$ are bounded, then the sliding equation coincides with equation (2.6). This implies that motion in sliding mode is invariant with the linear transformation of the discontinuity surfaces. To verify this fact let us comply with the procedure of the equivalent control method; first compute u_{eq} from the equation

$$\dot{s}^* = \Omega(x, t) G(f + Bu_{eq}) + \dot{\Omega} s = 0$$

In this equation G is an $m \times n$ matrix whose rows are gradients of the functions $s_i(x)$. Since the matrix $\Omega(x, t)$ is nonsingular, the value of u_{eq} is given by the relation

$$u_{eq} = -(GB)^{-1} Gf - (GB)^{-1} \Omega^{-1} \dot{\Omega} s \tag{4.2}$$

The resultant u_{eq} differs from an equivalent control function (2.5) computed for the system (2.2) and (2.3) in the addend $-(GB)^{-1} \Omega^{-1} \dot{\Omega} s$. Since in a real sliding mode, the vector s^* is a sufficiently small value dependent on nonidealities and $\det \Omega \neq 0$ then s is also small. The magnitudes $\| \dot{\Omega} \|$ and $\| \Omega^{-1} \|$ are bounded, therefore in the case where all nonidealities tend to zero the addend $-(GB)^{-1} \Omega^{-1} \dot{\Omega} s$ will also tend to zero and, consequently, this addend in u_{eq} needed for ideal-sliding equations can be eliminated (this conclusion can be arrived at through the stringent reasoning of Ch. II employed for substantiation of the equivalent control method). This implies that the values of u_{eq} for systems with discontinuity surfaces $s_i(x) = 0$ and $s_i^*(x, t) = 0$ coincide; therefore the sliding equations of these systems also coincide. What is important is that although sliding equations are invariable with the linear transformation (4.1), the transformation matrix $\Omega(x, t)$ itself influences the system motion in the subspace $s^*(x, t)$ in the vicinity of the manifold of discontinuity surfaces

$$\dot{s}^* = \Omega Gf + \Omega GBu + O(s^*) \tag{4.3}$$

where $O(s^*)$ is an infinitesimal of order $\| s^* \|$.

Recall that sliding domains can be found as a result of analysis of this equation. Thanks to this, in design of systems once the discontinuity surfaces or sliding motion is selected, one can try without changing the sliding equations to change the discontinuity surfaces by linear transformations (4.1) so as to reduce equation (4.3) to a form for which some sufficient conditions for sliding obtained in Ch. III can be applied. This point will be described in more detail in subsequent sections of this chapter.

Sec. 3. The Diagonalization Method

In compliance with the design sequence let us assume that in the system (2.2), (2.3) the discontinuity surfaces $s_i(x) = 0$ $(i = 1, \ldots, m)$ have been selected and it is required to determine a control vector for which the entire manifold of the intersection of discontinuity surfaces is a sliding domain and the describing point reaches this manifold from any initial position.

Let us try to select the control so that in equation (3.10), which describes the projection of the system motion on the subspace $s_1, \ldots, s_m$, the matrix GB will be diagonal. Then the motion in this m-dimensional subspace is decoupled into independent first-order motions, or into m scalar cases for each of which the conditions for a sliding mode to exist can be met, if for any x and t components of the control satisfy the conditions (3.32). This method of ensuring a sliding mode on the manifold $s = 0$ which assumes that sliding conditions are met on each of the surfaces $s_i(x) = 0$ will be referred to hereinafter as the diagonalization method.

Two alternative ways of implementing this method exist. On one a new vector control u^* is introduced which results from linear transformation of the original vector u

$$u^* = Q^{-1}(x, t)\, G(x)\, B(x, t)\, u \tag{4.4}$$

where $G(x)$ and $B(x, t)$ are matrices defined in compliance with (2.2) and (2.4) and $Q(x, t)$ is an arbitrary diagonal $m \times m$ matrix with elements $q_i(x, t)$ $(i = 1, \ldots, m)$, $\inf | q_i(x, t) | > 0$ for $0 \leqslant t < \infty$ and all x on the manifold $s = 0$. The components u_i^* $(i = 1, \ldots, m)$ of the vector u^* have discontinuities on the selected discontinuity surfaces

$$u_i^* = \begin{cases} u_i^{*+}(x, t) & \text{with} \quad s_i(x) > 0 \\ u_i^{*-}(x, t) & \text{with} \quad s_i(x) < 0 \end{cases} \tag{4.5}$$

With this substitution, equations (2.2) and (3.10) are rearranged

$$\dot{x} = f + B(GB)^{-1} Qu^*$$

$$\dot{s} = Gf + Qu^*$$

Assume that all functions in these equations are such that the equivalent control method is applicable. The sliding equation resulting from solution of the algebraic system $\dot{s} = 0$ for u^* and from substitution of the result into the equation system for the vector x coincides with sliding equation (2.6) for the system (2.2), (2.3). This fact is important because the discontinuity surfaces $s_i(x)$ $(i = 1, \ldots, m)$ are selected to suit equation (2.6).

For a sliding domain in a system transformed in this way to coincide with the intersection of discontinuity surfaces it is sufficient for all points x on that manifold to select the components of the vector u^* in compliance with (3.32)

$$\left.\begin{aligned} q_i(x, t)\, u_i^{*+}(x, t) &< -\operatorname{grad} s_i(x) f(x, t) \\ q_i(x, t)\, u_i^{*-}(x, t) &> -\operatorname{grad} s_i(x) f(x, t) \quad (i = 1, \ldots, m) \end{aligned}\right\} \tag{4.6}$$

In the original control

$$u = (GB)^{-1} Qu^* \tag{4.7}$$

which should be implemented in the system, each component has discontinuities on all discontinuity surfaces because any of the functions $u_i(x, t)$ is a linear combination of components of the vector $u^*(x, t)$. If the inequalities (4.6) hold for all points of the space $(x_1, \ldots, x_n)$ rather than only for those on the manifold $s(x) = 0$, then the quantities s_i and $\dot{s}_i$ are of opposite signs throughout and so the inequalities (4.6) are simultaneously the conditions for reaching the manifold.

Another version requires linear transformation of the vector s rather than the control in compliance with (4.1). The components of the vector u now have discontinuities on the new surfaces $s_i^*(x, t) = 0$ $(i = 1, \ldots, m)$. As shown in Sec. 2 for any matrix $\Omega(x, t)$ the sliding equations that are assumed selected, do not change. Compose the matrix $\Omega(x, t)$ so that in equation (4.3) the matrix preceding the control u, as in the other version, is a diagonal matrix $Q(x, t)$ with elements $q_i(x, t)$:

$$\Omega = Q(GB)^{-1}$$

In this case equation (4.3) describing the behaviour of the system in the vicinity of the manifold $s = 0$ will be presented in the form*

$$\dot{s}^* = s^0(x, t) + Q(x, t)\, u + O(s^*) \tag{4.8}$$

where s^0 is a vector with components $s_i^0\,(i = 1, \ldots, m)$ equal to $Q(GB)^{-1}\,Gf$. For such a system, the domain S on the manifold $s = 0$ is a sliding domain if for any of its points the conditions, similar to (3.32) and (4.6) are met

$$\left.\begin{aligned} q_i(x, t)\, u_i^+ &> -s_i^0(x, t) \\ q_i(x, t)\, u_i^- &< -s_i^0(x, t)\ \ (i = 1, \ldots, m) \end{aligned}\right\} \tag{4.9}$$

Unlike the first version, the reaching conditions are not obtained by extension of the inequalities (4.9) to the entire subspace $s_1^*, \ldots, s_m^*$ because in equation (4.8) the last addend can be neglected only in a small vicinity of the manifold $s^* = 0$. Let us write equations describing the motion of the system (2.2) over the entire subspace s^* which result from differentiation of equation (4.1)

$$\dot{s}^* = s^0(x, t) + Q(x, t)\, u + \dot{\Omega}\Omega^{-1}\, s^*(x, t) \tag{4.10}$$

The reaching conditions are met if in any point of the space $(x_1, \ldots, x_n)$ the quantities s_i^* and $\dot{s}_i^*$ are of opposite signs. According to (4.10) the following inequalities are sufficient for this purpose

$$\left.\begin{aligned} q_i(x, t)\, u_i^+ &< -s_i^0(x, t) - s_{i\Omega}(x, t) \\ q_i(x, t)\, u_i^- &> -s_i^0(x, t) - s_{i\Omega}(x, t)\ \ (i = 1, \ldots, m) \end{aligned}\right\} \tag{4.11}$$

where $s_{i\Omega}(x, t)$ are components of the vector $\dot{\Omega}\Omega^{-1}\, s^*(x, t)$. On the intersection of the discontinuity surfaces $s^* = 0$ all $s_{i\Omega}(x, t)$ are zero and the reaching conditions, as expected, coincide with the conditions (4.9) for a sliding mode to exist.

Consequently, as the sliding equations (or discontinuity surfaces) have been selected the diagonalization method-based design procedure may rely on two possible approaches leading

* For the matrix $\Omega(x, t)$ the requirement of Sec. 2 that the functions $\|\dot{\Omega}\|$ and $\|\Omega^{-1}\|$ be bounded is assumed to be satisfied.

to a sliding mode described by this equation. The first approach is the selection of control components as a linear combination of functions each of which has discontinuities on one of the selected surfaces and the second approach implies the replacement of the selected surfaces by new ones so that the sliding equations do not change.

Sec. 4. Quadratic Form-Based Design

Like the diagonalization method, the approach to be described requires the replacement of either the control vector or the discontinuity surfaces selected in compliance with the desired sliding equations. The replacement is supposed to reduce the equations to a form for which a positive definite quadratic form v and a control exist such that the derivative $\dot{v}$ along the state trajectories is a negative definite function. The existence of such a function v according to Sec. 2 of Ch. III, is evidence of existence of a sliding mode at the intersection of discontinuity surfaces.

The system (2.2), (2.3) is considered under the assumption that the discontinuity surfaces $s_i(x) = 0$ $(i = 1, \ldots, m)$ have been selected. The motion projection on the subspace $(s_1, \ldots, s_m)$ is described by the system (3.10).

Introduce a new m-dimensional control vector u^* whose components change in compliance with (4.5) and which is related to the vector u as

$$u = (GB)^{-1} D(x, t) (U^*)^{-1} u^*$$

where U^* is a diagonal matrix with elements $1/2 (u_i^{*+} - u_i^{*-})$ $(i = 1, \ldots, m)$; $D(x, t)$ is an arbitrary symmetric matrix which satisfies the conditions of Sec. 3, Ch. III, over the entire intersection of discontinuity surfaces; in other words, all principal minors of the matrix $-[D(x, t)]^{-1}$ are positive and have an upper and a lower bound. In this case, in the equations of the motion projection on the subspace s, (3.12), the vector $d(x, t)$ is equal to $Gf + D (U^*)^{-1} u^{*0}$ if $u^{*0} = \frac{1}{2} (u^{*+} + u^{*-})$, u^{*+} and u^{*-} are vectors with components $(u_1^{*+}, \ldots, u_m^{*+})$ and $(u_1^{*-}, \ldots, u_m^{*-})$. In thus designed system the sliding domain as shown in Sec. 3, Ch. III is described by the relations (3.22) which are valid both for constant and x-and t-dependent elements of the

matrix D and the vector d. Let us require that in the case under consideration the inequalities (3.22) hold over the entire intersection of discontinuity surfaces

$$\sup_{s=0} |l_k(x, t)| < 1 \quad (k = 1, \ldots, m) \tag{4.12}$$

where $l_k (k = 1, \ldots, m)$ are components of the vector l which is equal to $-D^{-1}d$. These inequalities can be true if, for instance, the vector u^{*0} is selected equal to $-U^*(D)^{-1}Gf$. Then the vector d and, consequently, the vector l are equal to zero. If this accurate compensation is found unwieldy for the implementation, then the sliding domain may be infinitely expanded by increasing the ranges of discontinuities in the components of the vector u^* or, which is equivalent, by increasing the elements of the matrix U^* and the matrix $D(x, t)$. In this case the elements of the vector l equal to $D^{-1}Gf + (U^*)^{-1}u^{*0}$ will decrease and this will lead to extension of the range of x for which the inequality (4.12) holds. For the describing point to reach, it is sufficient that the inequalities (4.12) be valid in the entire space $(x_1, \ldots, x_n)$ as well as over the manifold $s = 0$.

The other version requires replacement of the discontinuity surfaces selected to suit the desired motion in sliding mode in compliance with the transformation (4.1) with which the sliding equations are invariant. For this case components of the vector have discontinuities on the new surfaces $s^*(x, t) = 0$ $(i = 1, \ldots, m)$ and equation (3.12) is replaced by an equation describing the motion projection on the subspace s^*.

$$\dot{s}^* = \Omega(x, t) D(x, t) \operatorname{sign} s^* + \Omega(x, t) d(x, t) + \\ + \dot{\Omega}(x, t) [\Omega(x, t)]^{-1} s^* \tag{4.13}$$

where $D(x, t) = GBU$, $d(x, t) = Gf + GBu^0$, $u^0 = \frac{1}{2}(u_i^+ + u_i^-)$, U is a diagonal matrix with elements $\frac{1}{2}(u_i^+ - u_i^-)$; $\Omega(x, t)$ is a matrix of transforming the vector s into the vector s^*.

Select an arbitrary symmetric matrix $D^*(x, t)$ which over the entire intersection of discontinuity surfaces $s^*(x, t) = 0$ satisfies the conditions formulated in Sec. 3, Ch. III, i.e. that all principal minors of the matrix $-[D^*(x, t)]^{-1}$ are positive and have upper and lower bounds. Then if $\Omega = D^* D^{-1}$ (the

matrix D^{-1} does exist because det $GB \neq 0$ and det $U \neq 0$), then equation (4.13) is reduced to the form

$$\dot{s}^* = D^*(x, t) \operatorname{sign} s^* + D^*(x, t)\, D^{-1}(x, t)\, d(x, t) + \\ + \left[\frac{d}{dt}(D^* D^{-1})\right] D (D^*)^{-1} s^* \qquad (4.14)$$

The quantities $\| \dot{\Omega} \|$ and $\| \Omega^{-1} \|$ are assumed bounded.

In determining whether a sliding mode exists on the intersection of discontinuity surfaces, the last addend in equation (4.14) may be eliminated in compliance with the reasoning of the preceding section because at the intersection of discontinuity surfaces the vector s^* is equal to zero. In the system (4.14) the matrix $-D^*(x, t)$ is positive definite; therefore for this system, as was shown in Sec. 3, Ch. III, the sliding domain also is defined by the relations (3.22) which are identical with the inequalities (4.12). The conditions (4.12) are met if $u^0 = -(GB)^{-1} Gf$ and the vector l is equal to zero. If this accurate compensation is impossible, then the sliding domain resulting from inequalities (4.12) may be extended by increasing the values of elements in the matrix U because in this way the values of elements of the vector l equal to $U^{-1}(GB)^{-1}$ are reduced.

The reaching condition in this design method does not result from simple extension of the inequalities (4.12) to the entire space s^* with any values of x and t. This follows from the fact that to obtain the sliding conditions (4.12) from (3.22) the last addend in (4.14) was eliminated, but this can be done only in a small vicinity of the manifold $s^* = 0$. Moreover, in proving the legitimacy of using the conditions (3.22) for the varying matrix $D(x, t)$ (and the system (4.14) is such) extensive use was made of the fact that the motion occurs in a small vicinity of the intersection of discontinuity surfaces and that the value of s^* is almost zero.

In this section we will give only a clue about the sequence of actions to determine the reaching area, i.e. an area from which any state trajectory reaches the intersection of discontinuity surfaces. First, the method of Sec. 3, Ch. III, is used to obtain a positive definite function and its derivative is found through the system (4.13) without assuming that s^* is a sufficiently small quantity. The next step is to determine a region of values of

s^* such that with any x and t the function $\dot{v}$ is negative definite in Γ. The reaching area will be bounded by the surface $v = c$ ($c = \text{const}$) with a maximal value of c with which this surface is completely included in the region Γ. The design problem is solved if a matrix D^* is selected such that the reaching area includes the region of feasible initial conditions. Note that by virtue of Sec. 3, Ch. III, the matrix $-D^*$ can be sought not only among symmetric matrices with positive principal minors but also among those reduced to this type through multiplication by an arbitrary diagonal matrix with positive elements.

Sec. 5. The Method of Controls

The method of control hierarchy requires developing an artificial hierarchy of control components mentioned in Sec. 4, Ch. III. A hierarchy of controls needs the conditions (3.30) over the entire intersection of the discontinuity surfaces to be satisfied. The design sequence is as follows. First, for each component of the control, a discontinuity surface $s_i = 0$ is selected. Assume that in (3.29) with $k = 0$ for some i, e.g. for $i = 1^*$ (or for $k = 0$) the quantity of grad $s_1 \cdot b^i$ is bounded in modulus from below by a certain positive number. The equation for sliding along $s_1 = 0$ is described by (3.27) with $k = 1$. Then from (3.29) for $k = 1$ find the control component for which the product grad $s_2 \cdot b_1^i$ is bounded in modulus from below and which will have discontinuities on the surface $s_2 = 0$ (this component will be referred to as the second one). Treating in this way equation (3.29) for various k, find for each control component "its own" discontinuity surface and give a score to this surface. Note that with this distribution each of the equations $\dot{s}_k = 0$ can be solved for u_k equal to $u_{k\,\text{eq}}$ which is necessary for obtaining the equation of sliding along this surface. The magnitudes of u_k^+ and u_k^- ($k = 1, \ldots, m$) making the existence of a sliding motion possible at the intersection of discontinuity surfaces should be selected in compliance with the inequalities (3.30). One should start with the component u_m because the right-hand side of the inequalities (3.30) for

* If $i \neq 1$, then rearrange the column vectors b^i in the matrix B and in control components so that grad $s_1 b^1$ satisfies this condition.

$k = m - 1$ is independent of the remaining components of the control function. Because the value of grad $s_m \cdot b_{m-1}^m$ is other than zero, the functions u_m^+ and u_m^- always can be selected such that both inequalities are valid. Then the same sequence is used to select the function u_{m-1}^+ and u_{m-1}^- bearing in mind that the inequalities (3.30) should hold with any values of u_m^+ and u_m^- that have been selected at the preceding step. Next u_{m-2}^+ and u_{m-2}^- are determined in the light of the values of u_{m-1} and u_m selected during the preceding steps; the procedure is reiterated until u_1^+ and u_1^- are found. If the relations (3.30) are valid over the entire intersection of discontinuity surfaces, this intersection will be the sliding domain.

Whether the state reaches the intersection is found in the same way in which the conditions of sliding were found. Assume that a sliding mode has started at the intersection of the surfaces $s_i = 0$ $(i = 1, \ldots, m - 1)$ and the describing point moves in an $n - m + 1$-dimensional manifold. If for all points of this manifold the relations (3.30) are valid with $k = m - 1$, then s_m and $\dot{s}_m$ have opposite signs and the describing point will certainly reach the surface $s_m = 0$. This is sufficient for selection of the functions u_m^+ and u_m^-. The next step is to determine the functions u_{m-1}^+ and u_{m-1}^- (also with due regard for the selected u_m^+ and u_m^-) so that at the entire intersection of the surfaces $s_i = 0$ $(i = 1, \ldots, m - 2)$ the inequalities (3.30) hold with $k = m - 2$. Then with a sliding mode at this intersection the describing point cannot but reach the surface $s_{m-1} = 0$. In this sequence all u_i^+ and u_i^- are found for which the appropriate surface is reached. The control component u_1 should insure that the describing point reaches from any initial position in the n-dimensional space $(x_1, \ldots, x_n)$ the surface $s_1 = 0$. Since s_1 and $\dot{s}_1$ are of opposite signs in the entire space including the vicinity of the surface $s_1 = 0$, a sliding mode is certain to exist over this surface. Along the trajectories of this sliding motion the functions s_2 and $\dot{s}_2$ are of opposite signs, therefore the describing point reaches the intersection of the surfaces $s_1 = 0$ and $s_2 = 0$. In at most m steps all discontinuity surfaces thus are reached. The resultant reaching conditions differ from the conditions making a sliding mode possible at the intersection of the surfaces $s_i = 0$ $(i = 1, \ldots, m)$ only in that each pair of the inequalities (3.30) $(k = 0, \ldots, m - 1)$ should hold for the points of a manifold of higher dimensionality (for each k the

dimensionality of this manifold is $n - k$) as well as for the points of this intersection. Finding whether reaching occurs (which in our case implies that a sliding mode exists on the manifold $s = 0$) completes the solution of the design problem.

In concluding this Chapter, note the significant difference of this design method from those described in Sec s 2 and 3. In the diagonalization and quadratic form-based methods, linear transformations of the control vector or the vector s which defines the discontinuity surface were used to reduce the system equations to a form for which the sufficient conditions of sliding domain existence are met. The transformation matrix is in univalent dependence on the system equation factors and therefore to implement these approaches one should know the parameters of the plant and the system inputs (such as disturbances or reference input). If these are unknown or if the plant dynamics varies in a wide range, the methods of Secs 2 and 3 are unwieldy. The method of a hierarchy of controls relies on the inequalities (3.30). If only the signs of the nonzero functions grad $s_{k+1} b_k^{k+1}$ ($k = 0, \ldots, m-1$) are known, then by increasing the magnitude of u_{k+1}^+ and u_{k+1}^- these inequalities may be made to hold for any values of the right-hand sides provided only that these are constrained. It is for this reason that in solving various design problems for vector cases in control systems for time-varying plants the method of hierarchy of controls will be used in Part III.

Part II

SCALAR CONTROL PROBLEMS

This Part deals with control problems in systems with a scalar control under the assumption that this control is represented linearly in motion equations of these systems. In general the motion equation of such a system is of the form

$$\dot{x} = f(x, t) + b(x, t)\, u \tag{II.I}$$

where x is an n-dimensional state vector with components $x_1, \ldots, x_n$; f and b are n-dimensional vectors with components $f_1, \ldots, f_n$ and $b_1, \ldots, b_n$; u is scalar control.

It is required to select a function u such that the system has the desired properties. These may include dynamic indices of control, accuracy, the desired nature of solution dependence on any input functions (in particular, invariance with disturbances and reproduction of the setpoints), etc. The solutions will be sought for various cases of this general problem in the class of variable structure systems in which the control has discontinuities on a certain surface $s(x) = 0$

$$u = \begin{cases} u^+(x, t) & \text{with } s(x) > 0 \\ u^-(x, t) & \text{with } s(x) < 0 \end{cases} \tag{II.II}$$

where u^+ and u^- are certain continuous functions.

The usefulness of this approach has been demonstrated in the Introduction. The examples have shown that in the case of discontinuous controls both continuous structures (with u equal to u^+ and u^-) may satisfy significantly lower requirements than in the case where the control problem is solved within the framework of one continuous system.

In all the problems which will follow the control will be designed by using the approach of the last chapter of Part I.

Motion deliberately generated in sliding mode has the desired properties obtained by appropriate selection of the discontinuity surface. Once the discontinuity surface has been selected, the design problem is reduced to the choice of such continuous functions $u^+(x, t)$ and $u^-(x, t)$ for which the describing point reaches this surface from any initial position and a sliding mode exists in any point of the surface. The conditions (1.9) described in the Introduction for the sliding mode to exist in the scalar case are, for the system (II.I), (II.II) of the form

$$\left.\begin{aligned} [\text{sign } (\text{grad } s \cdot b)]\, u^+ &< -\frac{\text{grad } s \cdot f}{|\text{ grad } s \cdot b|} \\ [\text{sign } (\text{grad } s \cdot b)]\, u^- &> -\frac{\text{grad } s \cdot f}{|\text{ grad } s \cdot b|} \end{aligned}\right\} \qquad \text{(II.III)}$$

From these relations, the class to which the functions $u^+(x, t)$ and $u^-(x, t)$ should belong may be found. For instance, if the right-hand side in (II.III) is constrained, then the control function may be a relay one, or equal to one of the two constant values; if it is linearly dependent on x, then the magnitude of control should be a linearly increasing function of $\| x \|$, etc. The design problem may be complicated if there exist some constraints for u^+ and u^-; therefore, the discontinuity surfaces cannot be selected arbitrarily. Special attention should be given to control problems for time-varying plants for which the functions f and b in the motion equation (II.I) are in explicit dependence on time because of, for instance, changes in plant parameters or the presence of disturbances or reference inputs. In these cases the design of u is significantly dependent on whether the data on the values of these parameters and disturbances are available.

These questions will be treated for the case of a system linear with respect to x and u and described by the equations

$$\dot{x} = A(t)x + b(t)u + D(t)F(t) \qquad \text{(II.IV)}$$

where x is an n-dimensional state column vector; $A(t)$ is an $n \times n$ matrix; $b(t)$ is an n-dimensional column vector; $D(t)$ is an $n \times l$ matrix ($l < n$); $F(t)$ is an l-dimensional column vector.

Let us refer henceforth to the dynamic system (II.IV) as a plant and elements of the matrices A, D and b as its para-

meters. If there are no external actions, or $F(x) \equiv 0$, the motion will be referred to as free and if there are, as forced.

The scalar control u will be sought as a discontinuous function and the discontinuity surface will be the plane

$$s = c^T x \tag{II.V}$$

where c is a constant n-dimensional column vector $(c_1, \ldots, c_n)$, $c_n = 1$. Assuming that there is a sliding mode on the plane $s = 0$ and the equivalent control method is applicable to the system (II.IV), a sliding equation may be obtained in the form

$$\dot{x} = [I_n - b(c^T b)^{-1} c^T] Ax + [I_n - b(c^T b)^{-1} c^T] DF$$

This system represents a sliding mode along the plane $s = 0$ and therefore during the sliding $x_n = -\sum_{i=1}^{n-1} c_i x_i$. Substituting the resultant values of x_n into the first $n - 1$ equations of the original system and rejecting the last equation we find an $(n - 1)$ st order sliding equation system

$$\dot{x}^1 = A^1 x^1 + D^1 F \tag{II.VI}$$

where x^1 is an $(n - 1)$-st dimensional vector $(x_1, \ldots, x_{n-1})$ and elements a^1_{ij} and d^1_{ij} of the $(n - 1) \times (n - 1)$ matrix A^1 and the $(n - 1) \times l$ matrix D^1 are equal to

$$a^1_{ij} = a_{ij} - a_{in} c_j - b_i (c^T b)^{-1} [c^T a^j - c_j (c^T a^n)]$$

$$(i, j = 1, \ldots, n - 1)$$

$$d^1_{ij} = d_{ij} - b_i (c^T b)^{-1} c^T d^j \quad (i = 1, \ldots, n - 1, j = 1, \ldots, l)$$

respectively. In these relations a_{ij}, d_{ij}, $a^1, \ldots, a^n$ and $d^1, \ldots, d^j$ are elements and columns of the matrices A and D respectively.

The sliding equation (II.IV) depends on the vector c and it should be chosen to suit the design methods developed in the theory of linear systems. In any control system at least asymptotic stability of solution to the system (II.VI) should be guaranteed. If the stability is exponential, then equation (II.IV) obtained through the equivalent control method is valid over an infinite time interval, see Sec. 2 of Ch. II. Then a discontinuous control should be found such that on the plane (II.V) with the vector c selected a motion in sliding mode start and be maintained. In further discussion, the plane where

sliding exists at any point will be called the sliding plane. In subsequent chapters, this approach will be used in studying the control problems for free and forced motions of a plant with constant and time-varying parameters.

In addition to the general case of a system with scalar control (II.IV), attention will be given to an important class of systems whose motion is represented by the equations

$$\left.\begin{aligned} \dot{x}_i &= x_{i+1}\ (i = 1, \ldots, n-1) \\ \dot{x}_n &= -\sum_{i=1}^{n} a_i x_i - u - F(t) \end{aligned}\right\} \qquad \text{(II.VII)}$$

where all a_i are scalar parameters which can depend on time and $F(t)$ is a scalar disturbance. The sliding equations (II.VI) for this system are of the form*

$$\left.\begin{aligned} \dot{x}_i &= x_{i+1}\ (i = 1, \ldots, n-2) \\ \dot{x}_{n-1} &= -\sum_{i=1}^{n-1} c_i x_i \end{aligned}\right\} \qquad \text{(II.VIII)}$$

From these equations, it follows that motion in sliding mode is independent of plant parameters or the disturbance and depends only on the vector c which is to be selected. It is thanks to this property that systems of the kind have been treated in many publications on variable structure systems (see e.g. References in the monograph [45]. In further discussion (Ch. XI) the conditions of invariance with respect to plant properties and external disturbances will be treated for variable structure systems of a general form; certain specifics of control design in systems described by equations (II.VII) will be revealed in this Part.

---

* This equation can be obtained substituting $-\sum_{i=1}^{n-1} c_i x_i$ for x_n in the $(n-1)$-st equation of the system (II. VII) since in sliding mode $s = 0$.

Chapter V

CONTROL OF FREE MOTION OF TIME-INVARIANT PLANTS

Sec. 1. Motion Equations and Problem Statement

The motion equation of a linear system with scalar control (II.IV) for time-invariant plants with no external sections is of the form

$$\dot{x} = Ax + bu \tag{5.1}$$

where coefficients of the matrix A and the vector b are constant and the control u has discontinuities on the plane (II.V).

Motion in sliding mode along the plane $s = 0$ in such a system according to (II.VI) is described by the equation

$$\dot{x}^1 = A^1 x^1 \tag{5.2}$$

Assuming that c_i are components of the vector c in (II.V), or, which is equivalent, that the switching plane has been selected, let us find under what conditions this plane is a sliding plane. Write the conditions for (II.III) for a sliding mode to arise in this case

$$\left.\begin{aligned} [\text{sign}\,(c^T b)]\, u^+ &< -\,|\,c^T b\,|^{-1} c^T Ax \\ [\text{sign}\,(c^T b)]\; u^- &> -\,|\,c^T b\,|^{-1} c^T Ax \end{aligned}\right\} \tag{5.3}$$

The right-hand sides in the inequalities (5.3) are linear functions of the components of the vector x; therefore there exists a monotonically increasing function of $\| x \|$, u^+ and u^- such that these inequalities are valid with any x. What follows is a version of discontinuous control insuring the existence of a sliding plane. Assume that the control is a piecewise linear function of all coordinates of the system and

the coefficients of this function have discontinuities on the plane $s = 0$

$$\left.\begin{aligned} u &= -\sum_{i=1}^{n} \Psi_i x_i \\ \Psi_i &= \begin{cases} \alpha_i \text{ with } x_i s > 0 \\ \beta_i \text{ with } x_i s < 0 \end{cases} \end{aligned}\right\} \tag{5.4}$$

where α_i and β_i are constant.

In such a variable structure system consisting of 2^n linear structures in addition to the plane $s = 0$, the coefficients Ψ_i have discontinuities on coordinate planes but the control u undergoes discontinuities only on the plane $s = 0$. Consequently, the functions u^+ and u^- are continuous (although not continuously differentiable) and it is easily seen that for the system (5.1) with a control (5.4) all conditions are met under which the equivalent control method is applicable*.

Select the coefficients α_i and β_i of the linear structures so that the plane $s = 0$ is the sliding plane. From (5.4) it follows that the conditions (5.3) for a sliding mode to exist are met with any x provided that

$$\left.\begin{aligned} [\text{sign } (c^T b)]\, \alpha_i &> |\, c^T b\, |^{-1} c^T a^i \\ [\text{sign } (c^T b)]\, \beta_i &< |\, c^T b\, |^{-1} c^T a^i \\ (i &= 1, \ldots, n) \end{aligned}\right\} \tag{5.5}$$

where $a^1, \ldots, a^n$ are columns of the matrix A.

Since with the inequalities (5.5) valid s and $\dot{s}$ have opposite signs with any x, or in the entire state space rather than on the plane $s = 0$ alone, these inequalities constitute not only the conditions for the existence of a sliding plane but also a reaching condition.** A motion in sliding mode thus always starts

---

* We are dealing, strictly speaking, with an n-dimensional vector control whose components $\Psi_1, \ldots, \Psi_n$ have discontinuities on the same plane $s = 0$. This singular case has been discussed in Sec. 5 of Ch. II (case 1°); there the equivalent control method made it possible to find a sliding equation unambiguously at whatever nonidealities in control components $\Psi_1, \ldots, \Psi_n$.

** In the origin of coordinates $x = 0$, s and $\dot{s}$ are zero. However, a sliding mode exists because with any deflection from the origin of coordinates s and $\dot{s}$ have opposite signs and the describing point cannot disappear in any small vicinity of the plane $s = 0$.

and is maintained in such systems; the desired properties of this motion may be obtained by a proper choice of the vector c.

This design method shows the essential feasibility of controlling free motion of a time-invariant plant due to purposeful introduction of a sliding mode. It also should be noted that this method may prove "unduly redundant" because the control (5.4) consists of all the coordinates*; as a result 2^n linear structures appear in the system. Subsequent sections will treat design methods for systems with discontinuous controls in which the number of coordinates of the vector x can be reduced by cancelling some in (5.4). In such systems sliding planes cannot be selected arbitrarily. The conditions of existence of sliding planes are indicated and a class of controls is revealed which insure stable motion along the sliding plane. Reaching is treated for various kinds of systems.

Sec. 2. Conditions for Existence of a Sliding Plane

Let us consider a system with scalar control described by equation (5.1). Compose a control as a piecewise linear function of some k ($k < n$) system coordinates** with coefficients having discontinuities on the plane $s = 0$ (II.V) and a certain small relay action

$$u = -\sum_{i=1}^{k} \Psi_i x_i - \delta_u \tag{5.6}$$

where

$$\Psi_i = \begin{cases} \alpha_i \text{ with } x_i s > 0 \\ \beta_i \text{ with } x_i s < 0 \end{cases} \quad (i = 1, \ldots, k)$$

$$\delta_u = \begin{cases} \delta_0 \text{ with } s > 0 \\ -\delta_0 \text{ with } s < 0 \end{cases}$$

---

* Note that the use of control consisting of all coordinates without constraints on the coefficients leads to the desired dynamic properties in the class of linear systems as well. As shown in ref. [45], however, in systems with discontinuous coefficients each of the structures does not necessarily possess the desired properties, e.g. the structures may be unstable and with these constraints the dynamic properties of the control process in a system with discontinuous coefficients are always better.

** For instance $x_1, \ldots, x_k$; if the control consists of other k coordinates, these can be made first by rearranging the state vector.

α_i, β_i are constant coefficients; δ_0 is any small quantity whose sign is that of $c^T b$.

Before selecting the control parameters making the plane $s = 0$ a sliding plane, let us explain the use of the "relay component" δ_u in control. Let a second-order system be described by the equations

$$\left.\begin{aligned} \dot{x}_1 &= x_2 \\ \dot{x}_2 &= u \end{aligned}\right\}$$

and the control u is a piecewise linear function of x_1 without a relay-type component

$$u = -\Psi x_1$$

$$\Psi = \begin{cases} \alpha \text{ with } x_1 s > 0 \\ \beta \text{ with } x_1 s < 0 \end{cases} \quad (s = cx_1 + x_2,\ c = \text{const})$$

In the case when the coefficients α, β and c satisfy the inequalities

$$\beta < -c^2 < \alpha < 0$$

the phase portrait of the system is of the form of Fig. 13. Along the entire straight line $s = 0$ except the origin of coordinates, the state trajectories are directed towards this line and a sliding mode exists on it. In the origin of coordinates, the conditions of a sliding mode existence are not met because in any vicinity of that point there are always trajectories along which the describing point "goes away" from the switching line. If the relay term δ_u is introduced into the control, then in the point $x_1 = x_2 = 0$ the quantity $\dot{s} = -\delta_u$ has a sign opposite to that of s and therefore in a system with a control $-\Psi x_1 - \delta_u$ the straight line $s = 0$ is a sliding line.

Now let us find the conditions under which the plane $s = 0$ is a sliding plane. With a control (5.6) selected, find $\dot{s}$ through the system (5.1) considering that for the points of a switching plane

$$x_n = -\sum_{i=1}^{n-1} c_i x_i$$

$$\dot{s} = \sum_{i=1}^{k} [c^T a^i - c_i (c^T a^n) - (c^T b) \Psi_i] x_i +$$

$$+ \sum_{i=k+1}^{n-1} [c^T a^i - c_i (c^T a^n)] x_i - (c^T b) \delta_u \qquad (5.7)$$

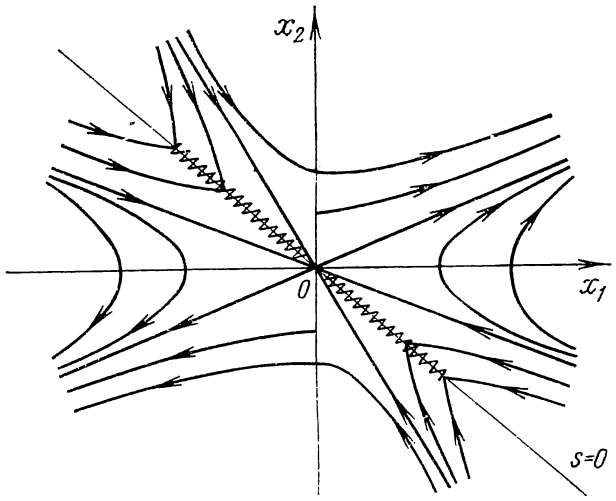

FIG. 13

It follows from this relation that the conditions (1.9) of sliding mode are met in each point of the switching plane if the coefficients α_i and β_i in the control (5.6) and the coefficients c_i of the plane equation satisfy the following conditions

$$\left.\begin{aligned}(c^T b)\,\alpha_i &\geqslant c^T a^i - c_i\,(c^T a^n)\\ (c^T b)\,\beta_i &\leqslant c^T a^i - c_i\,(c^T a^n)\,(i = 1, \ldots, k)\end{aligned}\right\} \tag{5.8}$$

$$\frac{c^T a^i}{c_i} = c^T a^n \;(i = k+1, \ldots, n-1) \tag{5.9}$$

With these conditions met each of the addends in the first sum and the function $-(c^T b)\,\delta_u$ in (5.7) have signs opposite to that of s, and the addends of the second sum are equal to zero. The resultant relations are the necessary as well as the sufficient conditions for a sliding plane to exist. Indeed, assume for a certain $i = r$ that one of the conditions (5.8), (5.9) is violated. Then in a point with coordinates $x_i = 0$ ($i=1, \ldots, n-1$, $i \neq r$) and $x_r \neq 0$ ($|x_r| \geqslant |\delta_0|$) the conditions (1.9) for a sliding mode are not observed.

Consequently, for the control (5.6) the conditions (5.8), (5.9) are the necessary and sufficient conditions for a sliding plane to exist. What is important is that in such systems the coefficients c_i which insure the desired kind of motion in sliding mode cannot be selected arbitrarily because these coefficients

should satisfy equations (5.9). An exception is the case where $k = n - 1$, or the conditions (5.9) vanish and the inequalities (5.8) can always be made to hold by a proper choice of the coefficients α_i and β_i. If these are bounded, however, the coefficients c_i can only be selected from a range specified by the inequalities (5.8). The presence of such additional constraints (5.8) and (5.9) on coefficients of the switching plane equation constitutes a feature of the design problem for systems of this kind. Let us cite certain examples where sliding equations are selected with due regard for the constraints dictated by the conditions for the existence of a sliding plane. Take up the case where free motion of the system is described by equations (II.VII) in which $n = 3$, $a_1 = a_2 = a_3 = 0$, or

$$\left.\begin{aligned} \dot{x}_1 &= x_2 \\ \dot{x}_2 &= x_3 \\ \dot{x}_3 &= u \end{aligned}\right\} \tag{5.10}$$

Let the discontinuous control u be in the form

$$u = -\Psi x_1 - \delta_u \tag{5.11}$$

where

$$\Psi = \begin{cases} \alpha & \text{with } x_1 s > 0, \\ \beta & \text{with } x_1 s < 0, \end{cases}$$

δ_u is selected in compliance with (5.6).

The discontinuity plane is given by the equation $s = 0$ where

$$s = c_1 x_1 + c_2 x_2 + x_3 \quad (c_1, c_2 = \text{const}) \tag{5.12}$$

We will set up the problem in order to secure in such a system the existence of a sliding motion and to endow the movement with a desired dynamic properties, using for this goal the conventional methods of linear systems theory which will derive from the conditions of the existence of a sliding plane. For instance, select the coefficients of equation (5.12) for the switching plane so that with (5.8) and (5.9) true stability degree is maximal (or the right eigenvalue of the sliding equation is placed as far to the left as possible).

Since for the system (5.10)

$$c^T b = 1,\ c^T a^1 = 0,\ c_i(c^T a^n) = c_1 c_2,\ c^T a^2 = c_1,\ c^T a^3 = c_2$$

the conditions (5.8), (5.9) should be represented in the form

$$\left.\begin{aligned} \alpha &\geqslant -c_1 c_2 \\ \beta &\leqslant -c_1 c_2 \end{aligned}\right\} \tag{5.13}$$

$$c_1 = c_2^2 \tag{5.14}$$

With the conditions (5.13), (5.14) true in the system (5.10), (5.11), (5.12) over the entire plane $s = 0$ a motion in sliding mode exists which is described in compliance with (II.VIII) by the linear equations

$$\left.\begin{aligned} \dot{x}_1 &= x_2 \\ \dot{x}_2 &= -c_1 x_1 - c_2 x_2 \end{aligned}\right\} \tag{5.15}$$

with constant parameters c_1 and c_2.

Select the coefficients c_1 and c_2 to suit the estimate known as the "stability degree".

The characteristic equation for (5.15) is of the form

$$p^2 + c_2 p + c_1 = 0 \tag{5.16}$$

Substituting c_2^2 for c_1 into (5.13) and (5.16) gives

$$\left.\begin{aligned} \alpha &\geqslant -c_2^3 \\ \beta &\leqslant -c_2^3 \end{aligned}\right\} \tag{5.17}$$

and

$$p^2 + c_2 p + c_2^2 = 0 \tag{5.18}$$

Find the roots of characteristic equation (5.18)

$$\left.\begin{aligned} \lambda_1 &= -\frac{c_2}{2} \pm j\frac{\sqrt{3}}{2} c_2 \\ \lambda_2 &= -\frac{c_2}{2} \pm j\frac{\sqrt{3}}{2} c_2 \end{aligned}\right\} \tag{5.19}$$

From (5.19) it is evident that the larger c_2 the faster the decay of motion in sliding mode. This implies that the coefficient c_2 should be selected as large as possible. One should

bear in mind, however, that the value of c_2 should satisfy (5.17) and its increase may disturb the last of the inequalities (5.17). Therefore, the desired value of c_2 insuring the maximal stability degree of system motion in sliding mode is obtained from (5.17)

$$c_2 = \sqrt[3]{-\beta} \tag{5.20}$$

The second example will be selection of the coefficients c_1 and c_2 for the same system (5.10), (5.11), (5.12) but this time with another criterion — quadratic performance index. Find c_1 and c_2 so as the integral

$$I = \int_0^\infty (x_1^2(t) + \tau^2 x_2^2(t))dt \quad (\tau = \text{const}) \tag{5.21}$$

is minimized.

The reference point will be the time when the describing point reaches the sliding plane and let $x_1(0) = 1$, $x_2(0) = 0$ at this point. In this case the performance index (5.21) takes the form

$$I = \frac{1}{2}\left(\frac{1}{c_2} + \frac{c_2}{c_1} + \tau^2 \frac{c_1}{c_2}\right) \tag{5.22}$$

Since in sliding mode $c_1 = c_2^2$

$$I = \frac{1}{c_2} + \frac{\tau^2}{2} c_2 \tag{5.23}$$

Obviously, $I = I_{\min}$ if $\frac{dI}{dc_2} = 0$, or

$$c_2 = \frac{\sqrt{2}}{\tau}$$

Recall that the value of c_2 should satisfy the inequalities (5.13). Therefore if for the value of c_2 minimizing the integral (5.21) the inequalities (5.13) hold, then this value should be assumed to be the desired one; if I is minimal at a value of c_2 such that the inequalities (5.13) do not hold, then one of the boundary values (or values with which one of the inequalities (5.13) becomes an equality) should be regarded as the desired value of c_2.

Sec. 3. Conditions of Sliding Motion Stability

In the system (5.1) with variable structure and a control (5.6), the coefficients in equations of the sliding plane cannot be selected arbitrarily and the constraints (5.9) do not necessarily include sliding planes with the desired kind of motion in sliding mode.

Let us find under what conditions motion in sliding mode features stability, a property most significant as far as the design of a control system is concerned. Assume that in the system (5.1) with a control (5.6) the switching plane (II.V) is a sliding plane, or that the conditions (5.8), (5.9) are met.

Replace the coordinate x_n by a new coordinate $s = \sum_{i=1}^{n} c_i x_i$ which by virtue of (II.V) is zero over the switching plane. The system motion will be studied in the space $x_1, \ldots, x_{n-1}, s$. To obtain an equation representing this motion, the last equation in (5.1) should be replaced by an equation for $\dot{s}$ computed through the system (5.1) and then in all n equations replace x_n by $s - \sum_{i=1}^{n-1} c_i x_i$. These transformations result in a system of motion equations

$$\left.\begin{aligned} \dot{x}^1 &= \bar{A}x^1 + a^s s + \bar{b}u \\ \dot{s} &= \sum_{i=1}^{n-1} [c^T a^i - c_i (c^T a^n)]\ x_i + (c^T a^n)\ s + (c^T b)\ u \end{aligned}\right\} \qquad (5.24)$$

where $\bar{A}$ is an $(n-1) \times (n-1)$ matrix with elements $\bar{a}_{ij} = a_{ij} - c_j a_{in} (i, j = 1, \ldots, n-1)$; a^s is a vector with elements a_{in} $(i = 1, \ldots, n-1)$, $\bar{b}$ is a vector with elements b_i $(i = 1, \ldots, n-1)$.

Equations (5.24) equivalent to the original equations (5.1) will be used in proving a theorem for verification of stability of motion along a sliding plane in the system (5.1).

Theorem*. *For asymptotic stability of motion of the system* (5.1) *in sliding mode along the plane* $s = 0$ (II.V) *it is necessary*

---

* A similar theorem for a system of type (II. VII) with $F(t) = 0$ and the control as a piecewise linear function of the only coordinate x_1 is treated in [25] and [53].

and sufficient that all the eigenvalues of the system (5.1) *with* u *equal to* u_{eq} *computed with* $s = 0$ *except the eigenvalue equal to* $c^T a^n$, *have negative real parts.*

Let us first show that if in the system (5.1) u is replaced by u_{eq} computed with $s = 0$, then one of the eigenvalues of a linear system thus obtained is equal to $c^T a^n$. In compliance with the equivalent control method u_{eq} is found as a solution of the equation $\dot{s} = 0$ with respect to u. From (5.24) u_{eq} is found with $s = 0$

$$u_{\text{eq}} = -(c^T b)^{-1} \sum_{i=1}^{n-1} [c^T a^i - c_i (c^T a^n)] x_i \tag{5.25}$$

The resultant value of u_{eq} is a linear function of x; therefore, its substitution into the system (5.1) for the control u yields a linear system with constant coefficients. Since equations (5.1) and (5.24) are equivalent, to determine the eigenvalues of this system, a system can be used which results from substituting u_{eq} from (5.25) into (5.24) rather than into (5.1):

$$\left.\begin{aligned} \dot{x}^1 &= A^1 x^1 + a^s s \\ \dot{s} &= (c^T a^n) s \end{aligned}\right\} \tag{5.26}$$

Note that by virtue of (II.VI) and (5.2) the matrix A^1 in (5.24) dictates the motion equations for a sliding mode. From the same system (5.26) one can see that the last equation is independent of x_i and, consequently, one of the eigenvalues of the system (5.1) with u equal to u_{eq} computed in compliance with (5.25) is indeed equal to $c^T a^n$. The remaining eigenvalues of this system are evidently the same as those of the system

$$\dot{x}^1 = A^1 x^1$$

which, by virtue of (5.2) represents motion in sliding mode. Therefore if all the eigenvalues of the system (5.26) except $c^T a^n$ have negative real parts, then the motion in sliding mode is asymptotically stable. This means that the theorem conditions are sufficient. It is easily proved by contradiction that these conditions are also necessary. One of the eigenvalues of the system (5.26) or a system resulting from substitution of u_{eq} from (5.25) for u is equal to $c^T a^n$. If one of the remaining $(n - 1)$ eigenvalues has a nonnegative real part then a motion in sliding mode cannot be asymptotically stable.

Let us use this Theorem to obtain a variable structure system in which the switching plane is a sliding plane and the motion in sliding mode along this plane is asymptotically stable. In such a system described by equation (5.1) with control (5.6) the conditions (5.8) and (5.9) should hold and with $u = u_{eq}$ all of its eigenvalues but one should have negative real parts. Note that with the existence conditions (5.9) met for the sliding plane the quantity u_{eq} in (5.25) is a linear combination of only k rather than all components of the vector x

$$u_{eq} = -(c^T b)^{-1} \sum_{i=1}^{k} [c^T a^i - c_i (c^T a^n)] x_i \tag{5.27}$$

Suppose that for a certain linear control function $u = \sum_{i=1}^{k} \gamma_i x_i$ ($\gamma_i = \text{const}$, $1 \leqslant k \leqslant n-1$) one of the eigenvalues of the system (5.1) is real and equal to λ and in the others the real parts are negative. Then equating the coefficients of the associated x_i in the equivalent control (5.27) to the coefficients γ_i, equating $(c^T a^n)$ to λ and completing these relations with the conditions (5.9) gives a system of equations

$$\left.\begin{aligned} &c^T(a^i + b\gamma_i) - c_i\lambda = 0 \quad (i = 1, \ldots, k) \\ &c^T a^i - c_i\lambda = 0 \quad (i = k+1, \ldots, n-1) \\ &c^T a^n - \lambda = 0 \end{aligned}\right\} \tag{5.28}$$

Solution of this system of n equations with respect to $n-1$ variables $c_1, \ldots, c_{n-1}$ (recall that $c_n = 1$) leads to an equation of a sliding plane with stable motion. To find whether a solution exists for the system (5.28) make use of an auxiliary system of n equations with respect to n variables $c_1, \ldots, c_n$:

$$c^T(A^* - \lambda E) = 0 \tag{5.28a}$$

where $A^* = A + b\gamma$, γ is an n_1-row vector, the first k elements are the coefficients $\gamma_1, \ldots, \gamma_k$, and the remaining $n-k$ elements are zero. It is evident that if there exists a solution to the system (5.28a) in which $c_n = 1$, then there is a solution to (5.28) too. Since λ is the eigenvalue of the matrix A^*, the system (5.28a) has a nontrivial solution, and thus (5.28) has a solution. If in this solution $c_n \neq 0$, then there is also a solution where $c_n = 1$. This signifies generally that a solution

to the system (5.28) generally does exist. Thus the problem of design for a variable structure system with stable motion along the sliding plane is reduced to (1) finding a linear control such that all the eigenvalues except possibly one have negative real parts; (2) determining the coefficients of the switching plane from the system (5.28) and (3) selection of discontinuous coefficients in the control (5.6) in compliance with the inequalities (5.8)*. The first step is made easier with increasing k or the number of free parameters γ_i which help obtain the desired values for the eigenvalues of the matrix A*, however, the controller of the system which generates the control (5.6) as a piecewise linear function of k coordinates with discontinuous coefficients is made more complicated. With $k = n - 1$ the condition for the existence of a sliding plane, (5.8), (5.9) contains only inequalities. If there are no constraints on the coefficients α_i and β_i, then all c_i in the equation for the sliding plane can be selected arbitrarily and therefore the stability or otherwise of motion in sliding mode, described by equation (5.1), is found by using ordinary methods developed in linear theory.

Let us illustrate this method of finding a control which would insure the existence of a sliding plane with stable motion using third- and fourth-order variable structure systems as examples.

Take up again a system described by equations (5.10), (5.11) and (5.12). Let us see that for such a system a sliding plane where motion is stable can be found. In compliance with the above design procedure find the roots of the characteristic equation for the system (5.10) with $u = \gamma x_1$ (or $k = 1$).

$$p^3 = \gamma \tag{5.29}$$

The roots of equation (5.29) are

$$\lambda_1 = \sqrt[3]{\gamma} > 0$$

$$\lambda_{2,3} = \sqrt[3]{\gamma}\left(-\frac{1}{2} \pm j\frac{\sqrt{3}}{2}\right), \quad \mathrm{Re}(\lambda_{2,3}) < 0$$

respectively and with any $\gamma > 0$ the characteristic equation of the system (5.10) has only one root in the right-hand semi-

* The singular case of $c^T b = 0$ is disregarded.

plane. This implies that there exists a sliding plane with asymptotically stable motion and the coefficients of a plane equation can be found from equations (5.28) which in our case are of the form

$$\left.\begin{aligned} c_1 \sqrt[3]{\gamma} &= \gamma \\ \frac{c_1}{c_2} &= \sqrt[3]{\gamma} \end{aligned}\right\} \tag{5.30}$$

From (5.30) it follows that $c_1 = \gamma^{\frac{2}{3}}$, $c_2 = \gamma^{\frac{1}{3}}$ (of course, with the conditions (5.13), or $\alpha \geqslant -\gamma$, $\beta \leqslant -\gamma$ hold).

Now let us take up a fourth-order system whose motion is represented by the equations

$$\left.\begin{aligned} \dot{x}_i &= x_{i+1} \quad (i = 1, 2, 3) \\ \dot{x}_4 &= u \end{aligned}\right\} \tag{5.31}$$

Let the control u be a piecewise linear function of only the coordinate x_1, or $k = 1$

$$u = -\Psi x_1, \quad \Psi = \begin{cases} \alpha \text{ with } x_1 s > 0 \\ \beta \text{ with } x_1 s < 0, \end{cases} \quad s = \sum_{i=1}^{4} c_i x_i, \quad c_4 = 1 \tag{5.32}$$

Following this procedure, find, with $u = \gamma x_1$, the roots of the characteristic equation $p^4 = \gamma$ of the system (5.31) with $\gamma > 0$

$$\lambda_{1,2} = \pm \sqrt[4]{\gamma}, \quad \lambda_{3,4} = \pm j \sqrt[4]{\gamma}$$

In this case no three roots with a negative real part can be found. Therefore let us try to insure the existence of a sliding plane with asymptotically stable motion with the control u as a sum of x_1 and x_2 with discontinuous coefficients

$$u = -\Psi_1 x_1 - \Psi_2 x_2$$

$$\Psi_1 = \begin{cases} \alpha_1 \text{ with } x_1 s > 0 \\ \beta_1 \text{ with } s_1 s < 0 \end{cases} \quad \Psi_2 = \left\{\begin{array}{l} \alpha_2 \text{ with } x_2 s > 0 \\ \beta_2 \text{ with } x_2 s < 0 \end{array}\right\} \tag{5.33}$$

Now let us make up for $u = \gamma_1 x_1 + \gamma_2 x_2$ a characteristic equation of the system (5.31)

$$p^4 - \gamma_2 p - \gamma_1 = 0 \tag{5.34}$$

If $\gamma_1 = r_1 r_2$, $\gamma_2 = r_2^3 - r_1$ (r_1, r_2 = const), then equation (5.34) can be represented in the form

$$(p - r_2)(p^3 + r_2 p^2 + r_2^2 p + r_1) = 0 \tag{5.35}$$

With $r_1 > 0$, $r_2 > 0$ and $r_2^3 > r_1$, all roots of equation (5.35) but one ($\lambda = r_2$) have negative real parts. This implies that to find the coefficients of a sliding plane with stable motion one can make use of equation (5.28) written with reference to the system (5.31)

$$\gamma_1 - c_1 \lambda = 0, \quad c_1 + \gamma_2 - c_2 \lambda = 0, \quad c_2 - c_3 \lambda = 0 \tag{5.36}$$

Substituting into (5.36) the values of γ_1, γ_2 and λ expressed in terms of r_1 and r_2 gives $c_1 = r_1$, $c_1 = r_2^2$, $c_3 = r_2$. The coefficients α_1, β_1 and α_2, β_2 should be selected with the values of c_i found by using the inequalities (5.8).

Note. The above design method relied on finding a linear control $u = \sum_{i=1}^{k} \gamma_i x_i$ such that $(n-1)$ eigenvalues of the system with this control have negative real parts. In the design procedure it was assumed that in the eigenvector c^T of the matrix A^*, or in the solution of the system (5.28a) the component c_n is other than zero. Where $c_n = 0$ and one of the coefficients $c_{k+1}, \ldots, c_{n-1}$ is not zero this procedure is applicable also after the coordinates of the vector x are renumerated with the ordinal number n given to those of them which are associated with the nonzero coefficient $c_i (i = k+1, \ldots, n-1)$ in the vector c. (The conditions for the existence of a sliding plane (5.8) and (5.9) should be written down in compliance with this new numeration.)

Let us now show that if in the solution of the system (5.28a) all $c_i (i = k+1, \ldots, n)$ are zero and some of the coefficients $c_1, \ldots, c_k$ are not, then for a sliding plane with stable motion to exist it is sufficient that the control consists of $k = 1$ rather than k coordinates. Assume that the nonzero coefficient is c_k which can be assumed equal to unity, or $s = x_k + \sum_{i=1}^{k-1} c_i x_i$ (if $c_k = 0$ and some coefficients $c_1, \ldots, c_{k-1}$ are not, then the first k coordinates of the vector x should be renumerated so as to make c_k nonzero). Let us write equations, similar to

(5.24) that define the behaviour of the system in the space $x_1, \ldots, x_{k-1}, x_{k+1}, \ldots, x_n, s$:

$$\left.\begin{aligned} \dot{x}^1 &= \bar{A}x^1 + a^s s + \bar{b}u \\ \dot{s} &= (c^T a^k)\, s + \sum_{\substack{i=1 \\ i \neq k}}^{n} [c^T a^i - c_i (c^T a^k)]\, x_i + (c^T b)\, u \end{aligned}\right\} \qquad (5.24a)$$

All elements in (5.24a) are computed by a procedure which has yielded the elements in (5.24), x^1 is an $(n-1)$-dimensional vector with components $x_1, \ldots, x_{k-1}, x_{k+1}, \ldots, x_n$.

Since with $u = \sum_{i=1}^{k} \gamma_i x_i$ or $u = \gamma_k s + \sum_{i=1}^{k-1} (\gamma_i - c_i \gamma_k) x_i$, the vector c^T and the quantity λ are the eigenvector and the eigenvalue respectively of the matrix A^*, the last equation in (5.24a) is of the form $s = \lambda s$, or

$$c^T a^k + (c^T b)\gamma_k = \lambda$$

$$c^T a^i - c_i (c^T a^k) = -(c^T b)(\gamma_i - c_i \gamma_k) \qquad (i = 1, \ldots, k-1)$$

$$c^T a^i - c_i (c^T a^k) = 0 \qquad (i = k+1, \ldots, n)$$

The last group of equalities implies that the equation for s in (5.24a) with arbitrary u can be rearranged as follows:

$$\dot{s} = (c^T a^k)\, s + \sum_{i=1}^{k-1} [c^T a^i - c_i (a^T a^k)]\, x_i + (c^T b)\, u$$

Then the plane $s = 0$ is a sliding plane, which signifies that for any of its points condition (1.9) holds if

$$u = -\sum_{i=1}^{k-1} \Psi_i x_i - \delta_u$$

$$\Psi_i = \begin{cases} \alpha_i \text{ with } x_i s > 0 \\ \beta_i \text{ with } x_i s < 0 \end{cases} \qquad \delta_u = \begin{cases} \delta_0 \text{ with } s > 0 \\ -\delta_0 \text{ with } s < 0 \end{cases}$$

$\alpha_i \geqslant c^T a^i - c_i (c^T a^k)$, $\beta_i \leqslant c^T a^i - c_i (c^T a^k)$, $(c^T b)\, \delta_0 > 0$

In this system u_{eq} computed with $s = 0$ and u equal to $\gamma_k s + \sum_{i=1}^{k-1} (\gamma_i - c_i \gamma_k) x_i$ differ in the addend $\gamma_k s$.

Substitution of these two linear controls into (5.24a) demonstrated that the resultant linear systems have $n - 1$ identical eigenvalues and differ in a single eigenvalue which determines the behaviour of the coordinate s. Since with $u = \sum_{i=1}^{k} \gamma_i x_i$ the identical $n - 1$ eigenvalues of these systems have negative real parts, then, according to the above theorem, the motion in the sliding plane is asymptotically stable. Consequently, if in the eigenvector of the matrix A^* associated with the eigenvalue λ all $c_i (i = k + 1, \ldots, n)$ are zero, the existence of a sliding plane with stable motion can be insured by using a control as a piecewise linear function of the $k - 1$ coordinates.

Chapter VI

STABILITY IN CONTROL SYSTEMS OF LINEAR STATIONARY PLANTS

Sec. 1. Problem Statement

In discussion of control systems consisting of several linear structures, the attention was focused on the existence conditions for a sliding mode along the entire discontinuity plane, i.e. for a sliding plane and on the stability conditions of motion along the discontinuity plane. If by proper selection of coefficients for the equation of the sliding plane, the motion in sliding mode obtains the desired property, in particular, stability, the design problem is completely solved provided that the describing point reaches the sliding plane from any initial position. In a system designed in this way a motion in sliding mode is certain to start at a certain time and be maintained.

This chapter will treat the stability of this kind of systems assuming that in the state space there is a sliding plane with asymptotically stable motion. It is evident that in this statement the problem of asymptotic stability for the entire system is reduced to finding the reaching conditions*.

Before studying the possibility of reaching for various types of systems, the structure of which changes through stepwise change of coefficients of the control, let us make the mathematical statement of the problem more specific. A dynamic system (5.1) with a control (5.6) is studied in which the switching plane (II.V) is a sliding plane, in other words, the conditions (5.8) and (5.9) are met and the motion in sliding mode described by the system (5.2) is asymptotically stable. Assume

* Here and below the conditions for the describing point to reach the switching plane from any initial position are for brevity referred to as reaching conditions.

that at the initial time t_0 the describing point is not on the switching plane, or

$$s(t_0) \neq 0 \tag{6.1}$$

The reaching problem is reduced to finding the conditions under which there is always a time t_1 such that

$$s(t_1) = 0 \tag{6.2}$$

Evidently with $t > t_1$ the state will be steered to the origin in sliding mode. The case where the describing point is asymptotically approaching the switching point, or

$$\lim_{t \to \infty} s(t) = 0 \tag{6.3}$$

is worthy of special attention. Let us show that the condition (6.3) insures asymptotic stability of the system.

Motion in sliding mode is described by linear equations with constant coefficients and is asymptotically stable, therefore stability of that motion is exponential. If the magnitude of the function $s(t)$ is smaller than a certain Δ, then by the equivalent control method the norm of the solution to a system of this kind will differ from that of a solution to the equation of a sliding mode over an infinite time interval by a value of about Δ. Motion in sliding mode is asymptotically stable and by virtue of the condition (6.3) with t sufficiently large Δ may be made as small as desired. This implies that the solution of the system in which the describing point asymptotically approaches the discontinuity surface is also asymptotically stable. Therefore it would be reasonable to assume that in the case of (6.3) the reaching also occurs because it follows from this condition as well as from the condition (6.2) that a variable structure system (5.1) is asymptotically stable.

Consequently, if asymptotically stable motion in sliding mode is a feature of the sliding plane, then to make the system asymptotically stable a control should be found such that one of the conditions (6.2) or (6.3) is met. In the subsequent section the reaching conditions will be treated for various types of discontinuous systems consisting of a set of linear structures with constant parameters.

Sec. 2. Necessary Reaching Conditions

Let us consider the necessary reaching conditions for a system (5.1), (5.6) consisting of 2^k linear structures with constant coefficients, a system whose structure changes on the plane $s = 0$ (II.V) and the coordinate planes $x_i = 0$ $(i = 1, \ldots, k)$.

It is required to find control parameters such that with the initial conditions (6.1) at least one of the conditions (6.2) or (6.3) is met.

Since before the reaching occurs s does not change sign, the function δ_u in the control (5.6) is a constant equal to δ_0 or $-\delta_0$. At any time the system motion is described by any of the 2^k linear systems of differential equations

$$\dot{x} = A_l x \pm b\delta_0 \tag{6.4}$$

where the matrix A_l $(l = 1, 2, \ldots, 2^k)$ is obtained by substitution of the control (5.6) with any fixed values of all $\Psi_i(\alpha_i$ or $\beta_i)$ into equation (5.1) and by cancelling the terms. In further discussion let us consider the cases where for any δ_0 each of the planes $x_i = 0$ $(i = 1, \ldots, k)$ does not contain entire trajectories of linear structures that are in its vicinity. Since on the planes $x_i = 0$ $(i = 1, \ldots, k)$, the control u has no discontinuities (despite discontinuities of the coefficients Ψ_i) and these planes do not contain entire trajectories, no motion of the describing point along any of the planes $x_i = 0$ $(i = 1, \ldots, k)$ in sliding mode or by virtue of the equation of one of the structures can arise. This implies that the points in which the system structure changes on the planes $x_i = 0$ $(i = 1, \ldots, k)$ make up a set of zero measure and have no effect on the motion in the system. This reasoning shows that before the reaching occurs the system behaviour can be studied only by using equations (6.4), for instance, sequentially taking up parts of trajectories and matching the terminal and the initial conditions. Let us now formulate and prove the necessary reaching conditions for the system (5.1) if all the matrices A_i are non-singular and each linear structure has no multiple eigenvalues.

Theorem. *For the describing point to reach the discontinuity plane it is necessary that for each structure the eigenvectors associated with the real eigenvalues and the equilibrium point* $x = \mp A_i^{-1} b\, \delta_0$ *should not belong to the existence domain of that structure.*

The existence domain of the structure will be a domain in the space $x_1, \ldots, x_n$ where the system motion is described by equations of this structure.

Let us prove this theorem by contradiction. Assume that characteristic equation (6.4) of one of the structures has a real root λ and an associated eigenvector w with components $w_1, \ldots, w_n$ belongs to the existence domain of this structure. Since this domain range depends on the signs of the coordinates $x_i (i = 1, \ldots, k)$ and the function $s = c^T x$, this assumption denotes that

$$\text{sign } s = \text{sign } c^T w, \ \text{sign } w_i = \text{sign } x_i \ (i = 1, \ldots, k) \tag{6.5}$$

($w_i \neq 0 \ (i = 1, \ldots, k)$ since otherwise one of the surfaces $x_i = 0 \ (i = 1, \ldots, k)$ would contain entire trajectories with $\delta_0 = 0$). Let the state vector at initial time coincide with the vector $w \mp A_l^{-1} b \delta_0$ and $\| w \| \gg \delta_0$; then the motion in the system is defined by the relation

$$x = w e^{\lambda t} \mp A_l^{-1} b \, \delta_0 \tag{6.6}$$

In compliance with (6.6) find the functions s and $x_i \ (i = 1, \ldots, k)$

$$\left.\begin{aligned} s &= (c^T w \mp c^T A_i^{-1} b \, \delta_0) e^{\lambda t} \\ x_i &= w_i e^{\lambda t} + r_i \, \delta_0 \end{aligned}\right\} \tag{6.7}$$

r_i are elements of the vector $\mp A_l b \delta_0$. Since $c^T w$ and $w_i \ (i = 1, \ldots, k)$ are non-zero and $\| w \| \gg \delta_0$, then by virtue of (6.5) and (6.7) the values of x_i and s do not change signs; in other words, the system structure remains unchanged over an infinite time interval and $\lim\limits_{t \to \infty} s = \infty$. Consequently, no reaching occurs.

If the second condition of the Theorem is changed, i.e., the equilibrium point of any structure is in its existence domain, then no reaching occurs for the state in this point at the initial time.

Consequently, if the Theorem conditions are violated one can find the initial conditions under which the describing point does not reach the plane $s = 0$. This proves that these conditions are necessary because by reaching conditions we mean those under which the describing point reaches the switching plane from any initial position.

Let us show that with the necessary conditions formulated here either the system structure has to change or the describing point reaches the sliding plane.

If all the eigenvalues of any of the structures have negative real parts, then all the trajectories converge to the equilibrium point which in compliance with the conditions of the theorem does not lie in the existence domain of this particular structure and therefore the system structure has to change*. If, however, in addition to eigenvalues with negative real parts there are complex eigenvalues with positive or zero real parts, then the quantities x_i and s are sign-varying functions and so the system structure has to change. Finally, if the eigenvalues include those with positive real parts but the associated eigenvectors are outside the existence domain of the structure, then the path of the describing point will approach this eigenvector** and, consequently, the system structure also changes.

Thus there is no reaching with the necessary conditions met and the describing point is alternatively on the left or on the right of one or several planes $x_i = 0$ $(i = 1, \ldots, k)$ and the system structure cannot remain intact.

Whether the necessary conditions are also sufficient remains an open question. The author is unaware of any proof of sufficiency or of the examples in which no reaching occurs if the necessary conditions do not hold.

Note. Let us note that the necessary reaching conditions of the above theorem are also sufficient for a second order system. Write down equations (II.V), (5.1) and (5.6) for the case of $n = 2$, $k = 1$:

$$\dot{x} = a_{11} x_1 + a_{12} x_2 + b_1 u$$

$$\dot{x}_2 = a_{21} x_1 + a_{22} x_2 + b_2 u$$

$$u = -\Psi x_1, \Psi = \begin{cases} \alpha & \text{with } x_1 s > 0 \\ \beta & \text{with } x_1 s < 0 \ (s = c x_1 + x_2) \end{cases}$$

---

* The earlier assumption that all matrices A_i are nonsingular prevents the occurrence of zero eigenvalues.

** An exception is the case when the real part of complex eigenvalues is larger than real positive eigenvalues but, as shown, the system structure would change in such cases.

The coefficients c, α and β are selected so that the motion in sliding mode is stable and sliding mode exists at any point of the straight line $s = 0$*, i.e.

$$(c^T b)\alpha > c^T a^1 - c_1 (c^T a^2)$$

$$(c^T b)\beta > c^T a^1 - c_1 (c^T a^2)$$

For either linear structure (with $\Psi = \alpha$ or $\Psi = \beta$) the eigenvectors associated with positive real eigenvalues, if they exist, do not lie in its existence domain. Let us prove that in this case the describing point is certain to reach the line $s = 0$ from any initial position.

Without loss of generality one can treat only the case of $s(t_0) > 0$. Before reaching the function, s is positive and the system structure only can change with the sign of x_1. At the time when the structure changes $x_1 = 0$ and since $s = c_1 x_1 + x_2 > 0$, at this time x_2 is positive. From the equation $\dot{x}_1 = a_{11} x_1 + a_{12} x_2 - b\Psi x_1$ it follows that with $x_1 = 0$ the rate $\dot{x}_1$ has the same sign as a_{12}** and therefore the system structure with $s > 0$ can change only once.

Let us take up the case of motion for a particular kind of system structure. In compliance with the reasoning of this section, with the necessary reaching conditions met the describing point either reaches the switching line or leaves the existence domain of the structure and a motion described by equations of the second structure starts in the system. For this motion it is also true that the describing point either reaches the switching line $s = 0$ or leaves the existence domain of the second structure. As found above, with $s > 0$ the structure cannot change again; therefore following the first change (if it occurred at all), the describing point is certain to reach the switching line. This proves that necessary con-

---

* Take note of the fact that this condition, unlike (5.8) is strict inequalities and the control has no relay component δ_u that would give rise to a sliding mode in the origin of coordinates where $\Psi x_1 = 0$; with $\delta_u = 0$ $\dot{s}$ vanishes. If, however, α and β are selected so that a hit is bound to occur, then there is no need in the component δ_u because with small deflections from the switching straight line the describing point either reaches this line within finite time and returns to the origin of coordinates along it or approaches the origin of coordinates asymptotically.

** If $a_{12} = 0$, then the straight line $x_1 = 0$ contains an entire trajectory but we have left out this case.

ditions in the Theorem on reaching are also sufficient for the second-order systems.

Note that for the third-order systems of the form (II.VII) the necessary conditions of the Theorem are also sufficient. This is proved in Ref. [58].

Sec. 3. Sufficient Reaching Conditions

Now let us take up the stability of variable structure systems of an arbitrary order whose motion is represented by the system of differential equations (5.1) with the control (5.6); it will still be assumed that the switching plane (II.V) is a sliding plane, or that the conditions (5.8), (5.9) are valid and motion in sliding mode is stable. As already noted, to ascertain the stability of such a system is to find the condition for the describing point in the system state space to reach the plane $s > 0$.

In this section the sufficient conditions of reaching are given for time-invariant systems; these conditions for the factors of the control (5.6) are stronger than the necessary reaching conditions of Sec. 2 and are formulated in the following theorems.

Theorem 1. *If in the system* (5.1), (5.6) *the plane* $s = 0$ *is a sliding plane, then the inequality*

$$c^T a^n \leqslant 0 \tag{6.8}$$

is a sufficient reaching condition.

To prove this theorem let us take up a time derivative of s. The differentiation of s, the replacement of the derivatives of the state variables by their values from equations (5.1) and cancelling of terms with due account of $x_n = s - \sum_{i=1}^{n-1} c_i x_i$ yield

$$\dot{s} = (c^T a^n)\, s + \sum_{i=1}^{k} [c^T a^i - c_i (c^T a^n) - (c^T b)\, \Psi_i]\, x_i + \\ + \sum_{i=k+1}^{n-1} [c^T a^i - c_i (c^T a^n)]\, x_i - (c^T b)\, \delta_u \tag{6.9}$$

Without loss of generality, assume that at the initial time s is positive. From the conditions for the existence of the sliding planes (5.8), (5.9) of the inequalities (6.8) and (5.6), it follows

that with $s > 0$ the right-hand side in (6.9) is negative, or, which is the same, that the function s decreases. Since the rate of decrease is smaller than $-(c^T b)\,\delta_0\, s$ vanishes at a certain time t_1 and the describing point reaches the sliding plane.

Let us now show that if in the control (5.6) there is no relay component δ_u (as noted in Sec. 2 a sliding plane may exist in such systems), the inequality (6.8) is still a condition sufficient for reaching. With $\delta_u = 0$ and the sliding conditions valid, the function $\dot{s}$ is no longer strictly negative and is merely non-positive. For such systems $\lim\limits_{t \to \infty} s = R$ with $R = \text{const}$ or $R = -\infty$. If $R \leqslant 0$, the reaching occurs in the system because one of the conditions (6.2) or (6.3) is met. Let us now have a look at the case of $R > 0$ using the system (5.24) which is equivalent to the original system (5.1). Since s tends to a constant value, $\lim\limits_{t \to \infty} \dot{s} = 0$. Bearing in mind that the solution of the equation $\dot{s} = 0$ with respect to u with $s = 0$ is equal to u_{eq}, the last equation of the system (5.24) gives

$$\lim_{t \to \infty} u = u_{\text{eq}} - (c^T b)^{-1}(c^T a^n)\, R$$

Substitution of u with t large enough into the first $(n-1)$ equations of the system (5.24) yields

$$\dot{x}^1 = A^1 x^1 + [a^s - \bar{b}(c^T b)^{-1}\,(c^T a^n)]\, R$$

The matrix A^1 dictates motion in sliding mode in the equation (5.2), which is asymptotically stable, therefore

$$\lim_{t \to \infty} x^1 = -(A^1)^{-1}\ [a^s - \bar{b}(c^T b)^{-1}(c^T a^n)]\, R$$

This implies that there exists an equilibrium point other than the origin of coordinates which does not belong to the switching plane (because $\lim\limits_{t \to \infty} s = R \neq 0$) and hence one of the structures should have a zero eigenvalue. We disregard this case, see Sec. 2; therefore, the function s cannot tend to any positive number and a reaching is certain to occur.

Let us give without proof theorems on sufficient reaching conditions for two types of systems of the form (II.VII).

Theorem 2. *If in a variable structure system* (II.VII) *with the control* (5.6) $k = n - 1$ *and all* c_i *in equation* (II.V) *for the*

*switching plane are positive**, *then for the describing point to reach the plane* $s = 0$ *it is sufficient that, firstly, the characteristic equation of the system with* $\Psi_i = \alpha_i (i = 1, \ldots, n-1)$ *and* $\delta_u = 0$ *does not have positive eigenvalues and, secondly, the conditions*

$$\alpha_i \geqslant -a_i, \beta_i \leqslant -a_i \, (i = 1, \ldots, n-1) \tag{6.10}$$

are met.

These conditions can be met through appropriate choice of the coefficients α_i and β_i while the increase in α_i results in meeting the first condition of the theorem. The proof of Theorem 2 is given in Ref. [20].

Theorem 3 is concerned with the reaching conditions for a variable structure system of the form (II.VII) in which the control is a piecewise linear function of x_1. The motion of such a system is described by the equations

$$\left.\begin{aligned} \frac{dx_i}{dt} &= x_{i+1} \, (i = 1, \ldots, n-1) \\ \frac{dx_n}{dt} &= -\sum_{i=1}^{n} a_i x_i - \Psi x_1 - \delta_u \end{aligned}\right\} \tag{6.11}$$

$$\left.\begin{aligned} \Psi &= \begin{cases} \alpha \text{ with } x_1 s > 0 \\ -\alpha \text{ with } x_1 s < 0 \end{cases} \\ \delta_n &= \begin{cases} -\delta_0 \text{ with } s > 0 \\ \delta_0 \text{ with } s < 0 \end{cases} \end{aligned}\right\} \tag{6.12}$$

where δ_0 is a positive number which may be as small as desired.

Theorem 3. *If in the system* (6.11), (6.12) *all* c_i *are positive (and this is the necessary condition for stability of sliding mode), then there always exists a positive number* Ψ_0 *such that with* $\alpha \geqslant \Psi_0, \beta \leqslant -\Psi_0$ *the describing point reaches the switching plane* $s = 0$ *from any initial position.*

The proof is given in the monograph [45].

According to this theorem, a reaching (and consequently, stability) can be obtained by increasing the feedback gain.

---

* For stability of the sliding mode, represented by equation (II. VIII), it is necessary that all c_i are positive.

This method of system stabilization also can be used in the case where the control (5.6) is a sum of several coordinates with discontinuous coefficients (or $k > 1$).

It would be proper to note that this theorem is of a qualitative nature because the value of Ψ_0 cannot be determined; only the existence of a minimal feedback gain is indicated at which the stability is obtained. This theorem may prove sufficient to give up the additional requirements to the plant or the controller structure of Theorems 1 and 2 if these requirements are not feasible or admissible or because of some specifics in the system operation.

Chapter VII

CONTROL OF FREE MOTION IN LINEAR TIME-VARYING PLANTS

The use of discontinuous controls for plants with time-varying characteristics results in motion in sliding mode dependent on the equations for discontinuity surfaces; this fact should be used in obtaining the desired pattern of control processes. The methods of the design of such systems may result from natural extension of the methods intended for the control of free motion in time-invariant plants.

Sec. 1. Motion Equations and Conditions for the Existence of a Sliding Plane

When the plant is linear and time-varying and is not subjected to external action (in other words, the motion is free), the equation of the system controlling its motion is by virtue of (II.IV) of the form

$$\dot{x} = A(t)x + b(t)\,u \tag{7.1}$$

As before, the control is assumed to have discontinuities on the plane $s = c^T x = 0$ (II.V) and, consequently, motion in sliding mode is described by an $(n - 1)$st order equation system

$$\dot{x}^1 = A^1 x^1 \tag{7.2}$$

where the parameters of the matrix A^1 depending on A, c^T and b are found from the relations (II.VI). Note that equations (II.VI) are obtained under the assumption that the equivalent control method is applicable to the original system or $c^T b$ is nonzero.

Suppose that despite the variability of coefficients of the matrix A^1, the vector c^T can be found such that the solution

of the system (7.2) meets all the requirements of the control process. Let us try to find even in this case a control u such that the selected switching plane is a sliding plane and that reaching occurs in the system. This problem is solved under the condition that the plant parameters cannot be measured, as is often the case, and only their range is known

$$\left.\begin{aligned} a_{ij\,\min} \leqslant a_{ij}(t) \leqslant a_{ij\,\max} \quad (i,j = 1, \ldots, n) \\ b_{i\,\min} \leqslant b_i(t) \leqslant b_{i\,\max} \quad (i = 1, \ldots, n) \end{aligned}\right\} \tag{7.3}$$

where $a_{ij\,\min}$, $a_{ij\,\max}$, $b_{i\,\min}$, $b_{i\,\max}$ are constant.
Let us also assume that the sign of the nonzero function $c^T b$ does not change and is known with $\inf \mid c^T b \mid \neq 0$.

Let us try to insure the existence of a sliding plane by using the control (5.6) which was used to control free motion of linear time-invariant plants.

The function $\dot{s}$ for the system (7.1), (5.6) has the same form (5.7) as for the system (5.1) with the only difference that the vectors a^i and b in (5.7) vary in time. The conditions (5.9) for the existence of a sliding plane cannot be used, however, for time-varying systems. Indeed, the plant parameters are assumed unknown and therefore the conditions (5.9) which are strict equalities cannot be met. In addition even if these parameters could be measured during the control phase and the coefficients of the vector c^T were changed in compliance with (5.9), the function $\dot{s}$ should contain time derivatives of c_i and thus, the conditions (5.8) and (5.9) obtained from (5.7) would be illegitimate.

Therefore, it stands to reason that the control of time-varying plants is a control such that the conditions for the existence of a sliding plane consist of inequalities alone. This will be the case, as follows from (5.8), (5.9), if the control (5.6) consists of a sum of $(n-1)$ coordinates or $k = n-1$. In this case the equalities (5.9) vanish, the conditions (5.8) should be rearranged to recognize the variability of coefficients in the elements of the matrix $A(t)$ and the vector $b(t)$

$$\begin{aligned} &(\operatorname{sign} c^T b)\,\alpha_i \geqslant \sup_t \mid c^T b \mid^{-1} [c^T a^i - c_i (c^T a^n)] \\ &(\operatorname{sign} c^T b)\,\beta_i \leqslant \inf_t \mid c^T b \mid^{-1} [c^T a^i - c_i (c^T a^n)] \\ &\qquad\qquad (i = 1, \ldots, n-1) \end{aligned} \tag{7.4}$$

Since the system parameters vary in the limited range (7.3), the sign of the function $(c^T b)$ is known and $\inf_t \mid c^T b \mid \neq 0$,

the conditions for the existence of a sliding plane can always be met by selecting, in compliance with the inequalities (7.4), he coefficients α_i and β_i for the linear structures of the system.

Sec. 2. Stability Conditions

For the system (7.1) the stability will be ascertained, as was done for stationary systems under the assumption that the switching plane is a sliding plane with asymptotically stable motion. Then the problem is reduced to finding the reaching conditions.

In the system (7.1) with a control (5.6) and with $k = n - 1$ and the conditions (7.4) for a sliding plane to exist, the describing point reaches the plane $s = 0$ from any initial position if

$$\sup_t (c^T a^n) \leqslant 0 \tag{7.5}$$

The proof is obtained with the reasoning used in proof of Theorem 1 in Sec. 3, Ch. 6. With the above assumptions, the condition (7.5) is a condition for the system (7.1) to be asymptotically stable.

Now let us take up the problem of reaching in the system (7.1) if the control (5.6) does not include the component δ_u.

Let us explain why this component can be left out in a system with a control (5.6) and $k = n - 1$. If in (5.6) $k < n - 1$, $\delta_n = 0$ and under the conditions (5.8), (5.9) for the sliding plane to exist, the inequalities (5.8) are replaced by strict inequalities, then by virtue of (5.7) $\dot{s}$ vanishes over the manifold $x_i = 0$ $(i = 1, \ldots, k)$, $s = 0$. The introduction of δ_u into the control was dictated by the need to insure a sliding mode on that manifold. In the case when in such a system $k = n - 1$, a sliding mode exists on the entire plane possibly with the exception of the origin of coordinates. This implies that if the describing point is certain to reach the sliding plane then there is no need in introducing the component δ_u into the control function*. (Recall that the same reasoning was used in Sec. 2 of Ch. 6 treating the reaching conditions in second-order systems whose control did not include δ_u.)

---

* If, however, the reaching conditions are violated the second-order example whose phase portrait is shown in Fig. 13, proves that the describing point in sliding mode approaches the origin of coordinates and then can go to infinity should any small deviation from some range happen.

Consequently, the sliding plane in the system (7.1) with a control (5.6) with $\delta_u = 0$ and $k = n - 1$ is a sliding plane if the conditions (7.4) are strict inequalities and the reaching condition is met. Let us prove that for such a system in the case of det $A \neq 0$ the inequality (7.5) is a sufficient condition for reaching. For this purpose write equation (6.9) for our case

$$\dot{s} = (c^T a^n)\, s + \sum_{i=1}^{n-1} [c^T a^i - c_i (c^T a^n) - (c^T b)\, \Psi_i]\, x_i \qquad (7.6)$$

where all Ψ_i are found from (5.6).

Let at the initial time $s > 0$. Then with the conditions (7.4) and (7.5) holding until reaching occurs $\dot{s}$ is nonpositive. For such functions $\lim_{t \to \infty} s = R$ with $R = \text{const}$ or $R = -\infty$. The case of $R \leqslant 0$ denotes reaching because one of the inequalities (6.2) or (6.3) holds. If $\lim_{t \to \infty} s = R > 0$, then $\lim_{t \to \infty} \dot{s} = 0$ and from (7.6) and in the light of the fact that the conditions (7.4) are strict in equalities, we have $\lim_{t \to \infty} x_i = 0$ $(i = 1, \ldots, n - 1)$ and, consequently, $\lim_{t \to \infty} x_n = \lim_{t \to \infty} \left(s - \sum_{i=1}^{n-1} c_i\, x_i \right) = R \neq 0$

$\lim_{t \to \infty} u = \lim_{t \to \infty} \sum_{i=1}^{n-1} \Psi_i\, x_i = 0$. However, as has been specified, det $A \neq 0$, and therefore in the system (7.1) with $u = 0$ the case of $R > 0$ is out of the question and a reaching is certain to occur. If, however, det A may vanish, then to obtain the reaching conditions the condition (7.5) should be replaced with a strict inequality. The proof is obvious since with $s > 0$ the value of $\dot{s}$ in such a system is strictly negative.

In conclusion of this chapter let us give without proof the reaching conditions for a system whose motion in the space of some coordinate and its derivatives is described by equations (II.VII) with coefficients $a_i(t)$ varying in some limited range.

If in the system (II.VII) with a control (5.6) and $k = n - 1$ the switching plane is a sliding plane, then for the describing point to reach this plane it is sufficient that

$$\left.\begin{aligned} &\alpha_i \geqslant \inf_t a_i(t) \\ &\beta_i \leqslant -\sup_t a_i(t) \qquad (i = 1, \ldots, n-1) \\ &\inf_t a_n(t) \geqslant 0 \end{aligned}\right\} \qquad (7.7)$$

If the control (5.6) does not include the relay component δ_u then to obtain the sliding conditions, the conditions (7.7) should be replaced by strict inequalities. The proof of this assertion is given in Ref. [99].

The proof of Theorem 3 of Sec. 3, Ch. 6 given in Ref. [45] is also valid for systems of the type (II.VII) with varying parameters. By virtue of the conditions of the theorem, there is always a positive number Ψ_0 such that with $\alpha_1 \geqslant \Psi_0$, $\beta \leqslant -\Psi_0$ reaching is certain to occur.

Let us recall that in application the most promising feature of the systems of type (II.VII), with the control as a function of some coordinate and its derivatives, is the independence of sliding motions described by equations (II.VIII) of the variable plant parameters.

Chapter VIII

CONTROL OF FORCED MOTION IN LINEAR PLANTS

It is common knowledge that any real control system is subjected to exogenous effects. These may be either setpoints to be tracked by the system or all kinds of disturbances in various points of the control system. What makes normal functioning hard to obtain is that the disturbances cannot be measured.

Usually there are some a priori data on the disturbances such that the designed system is expected to perform its functions without direct measurement of the disturbances.

This chapter will be concerned with control of a plant subjected to external disturbances, the motion of the plant is described by equations (II. IV). If in the system state space, a certain plane (II.V) is selected where the control has discontinuity then a motion in sliding mode can arise which is described by equations (II. VI). The sliding equations are seen from (II. VI) to depend on the external disturbances and on the coefficients of equations for the switching plane. If these coefficients can help in obtaining the desired dependence of solutions on these disturbances (for instance, independence of some coordinate of disturbances, responsiveness to changes of the reference input), then, as before, a control should be selected in design such that the switching plane is the sliding plane and is reached by the describing point from any initial position.

The sliding conditions (II. III) for the system (II. IV) are of the form

$$(c^T b)\, u^+ > - c^T Ax + c^T DF$$

$$(c^T b)\, u^- > - c^T Ax + c^T DF$$

When the external disturbances $f_1, \ldots, f_l$ are accessible for measurement, these conditions can be satisfied in the class of so-

called combined systems* in which the control is a function of the components of the vectors x and F. Indeed, there certainly exist functions u^+ and u^- whose magnitude grows monotonically with respect to $\| x \|$ and $\| F \|$ and with which the above inequalities hold.

Section 1 of this chapter will describe control laws leading to the parameters of thus designed combined system for plants with constant and time-varying parameters. Then the cases with no measurement of disturbances will be treated in which the sliding modes still provide the desired properties.

Sec. 1. Combined Systems

In a number of cases, the external disturbances $F(t)$ can be measured. If so, these data should be used in developing the control law. Let us try to do this in solving the design problem for variable structure systems.

Let us take up a control system whose motion is described by equation (II. IV) where, however, the matrices A and D and the vector b are constant, or

$$\dot{x} = Ax + bu + DF \tag{8.1}$$

where x, A, b, D, F and u are the same as in equation (II. IV).

Let the structure change on the plane $s = c^T x = 0$ and the control be a function not only of the system coordinates but also of the external disturbances

$$u = u^x + u^F \tag{8.2}$$

where u^x is a control of the form (5.6) which was used in all earlier control problems for free motion, u^F is an additional control function which is a function of the measured disturbances

$$\left.\begin{aligned} u^x &= -\sum_{i=1}^{k} \Psi_i x_i - \delta_u \\ u^F &= -\sum_{j=1}^{l} \Psi_j^f f_j \end{aligned}\right\} \tag{8.3}$$

* The use of the combined control for variable structure systems is described in Refs. [30], [85] and [88].

In (8.3) each of the coefficients Ψ_i and Ψ_j^f can take two values either of α or of β and these coefficients change in compliance with the control laws

$$\left.\begin{aligned} \Psi_i &= \begin{cases} \alpha_i \text{ with } x_i s > 0 \\ \beta_i \text{ with } x_i s < 0 \end{cases} \quad (i = 1, \ldots, k) \\ \Psi_j^f &= \begin{cases} \alpha_j^f \text{ with } f_j s > 0 \\ \beta_j^f \text{ with } f_j s < 0 \end{cases} \quad (j = 1, \ldots, l) \end{aligned}\right\} \tag{8.4}$$

and the function δ_u is as in (5.6).

Let us show that with proper selection of the values of α_i, β_i, α_j^f and β_j^f the conditions for existence of a sliding mode can be met in any point of the plane $s = 0$, or this plane can be made a sliding plane. As already noted, the conditions for existence of a sliding mode are specified by the inequalities (1.9).

Let us find the value of $\dot{s}$ on the plane $s = 0$ or with

$$x_n = -\sum_{i=1}^{n-1} c_i x_i$$

$$\begin{aligned} \dot{s} = &\sum_{i=1}^{k} [c^T a^i - c_i (c^T a^n) - (c^T b) \Psi_i] x_i + \\ &+ \sum_{i=k+1}^{n-1} [c^T a^i - c_i (c^T a^n)] x_i - (c^T b) \delta_u + \\ &+ \sum_{i=1}^{l} [c^T d^i - (c^T b) \Psi_i^j] f_i \end{aligned} \tag{8.5}$$

From (8.2)-(8.5) follow the necessary and sufficient conditions for existence of a sliding plane

$$\left.\begin{aligned} &(c^T b)\, \alpha_i \geqslant c^T a^i - c_i (c^T a^n) \\ &(c^T b)\, \beta_i \leqslant c^T a^i - c_i (c^T a^n) \quad (i = 1, \ldots, k) \\ &\frac{c^T a^i}{c_i} = c^T a^n \quad (i = k+1, \ldots, n-1) \end{aligned}\right\} \tag{8.6}$$

$$\left.\begin{aligned} &(c^T b)\, \alpha_i^f \geqslant c^T d^i \\ &(c^T b)\, \beta_i^f \leqslant c^T d^i \quad (i = 1, \ldots, l) \end{aligned}\right\} \tag{8.7}$$

If the dynamic properties of the plant vary, or if the matrices A and D and the vector b are time-varying, then k should be

selected equal to $n - 1$. Then the equalities in equations (8.6) vanish and the conditions (8.6), (8.7) should be rearranged

$$\left.\begin{aligned}
&\operatorname{sign}(c^T b)\,\alpha_i \geqslant \sup_t |\, c^T b\,|^{-1}[c^T a^i - c_i (c^T a^n)] \\
&\operatorname{sign}(c^T b)\,\beta_i \leqslant \inf_t |\, c^T b\,|^{-1}[c^T a^i - c_i (c^T a^n)] \\
&\qquad\qquad (i = 1, \ldots, n-1) \\
&\operatorname{sign}(c^T b)\;\alpha_i^f \geqslant \sup_t |\, c^T b\,|^{-1}(c^T d^i) \\
&\operatorname{sign}(c^T b)\,\beta_i^f \leqslant \inf_t |\, c^T b\,|^{-1}(c^T d^i) \\
&\qquad\qquad (i = 1, \ldots, l)
\end{aligned}\right\} \qquad (8.8)$$

and there are no constraints on selection of the vector c^*. Consequently, a sliding mode may be obtained on any plane.

Ascertaining the stability of combined variable structure systems is again reduced to the problem of a describing point reaching the sliding plane. The reasoning of Ch. VI and Ch. VII for free motion shows that the inequalities

$$c^T a^n \leqslant 0 \text{ and } \sup_t (c^T a^n) \leqslant 0$$

also are reaching conditions for combined systems with constant and variable parameters respectively.

Sec. 2. A Method of Design of a Control System without Measurement of Disturbances

We have discussed the existence of a sliding plane for systems where the external disturbances can be measured. In many cases, however, the disturbances cannot be directly measured.

In the Introduction the essential feasibility of reproduction of control systems which do not require measurement of external signals in the class of variable structure systems (Fig. 3*a*, *b*, 4*a*, *b*, *c*) was shown. The reproducibility of the setpoint by a controlled coordinate and invariance with the disturbance were

* As noted in Ch. VII for $k = n - 1$ the relay component may be eliminated from the control (8.2) if the conditions for α_i and β_i in (8.8) are strict inequalities and the reaching conditions hold.

insured by a stepwise change of the gains of the main and local feedbacks. This idea was used extensively in development of control system of forced motion of the plant. Initially it was applied to control the forced motion of a plant described by an equation with respect to the error and its derivative when the disturbances change unpredictably and cannot be measured, Refs [87, 97, 98]. First let us describe the concept of a system without measurement of disturbances and in Sec. 3 the relations will be obtained for computing the controller parameters. The method will be extended to systems of the general form (II. IV) in Sec. 4.

The essence of the method of Refs. [87, 97, 98] conveniently can be described by using the system diagram in Fig. 14, where P is the plant, SM is the servomechanism, F is the sum of disturbances*, x and y are output coordinates of the plant and the servomechanism respectively and u is the control. The objective of control is to make the coordinate x vanish in the presence of disturbances $F(t)$ which are inaccessible for measurement. The control should be such that the output of SM is equal, with an opposite sign, to the sum of disturbances. If the control u is equal to the function u^x generated in unit *1* as a sum of the coordinate x and its derivative with discontinuous coefficients, then the problem posed can not be solved. Indeed, if we assume that the coordinate x is identically zero, the control u is also zero. In general, with the zero control a nonzero disturbance will disturb the zero state of the system. It is for this reason that in combined variable structure systems the control was made to include an additional action u^F which counteracts the disturbances. In our case $F(t)$ cannot be measured but data on the disturbance can be obtained in terms of the servomechanism output which, at least in the desired mode where $x(t) \equiv 0$, is equal to $-F(t)$. Therefore, unlike the case of combined systems the control is a sum of u^x and a certain function u^y generated in unit *2* as a piecewise continuous function of the coordinate y and its derivatives

$$u = u^x + u^y \tag{8.9}$$

* For a tracking system the setpoint to be tracked by the controlled variable also should be regarded as a disturbance with respect to the error coordinate.

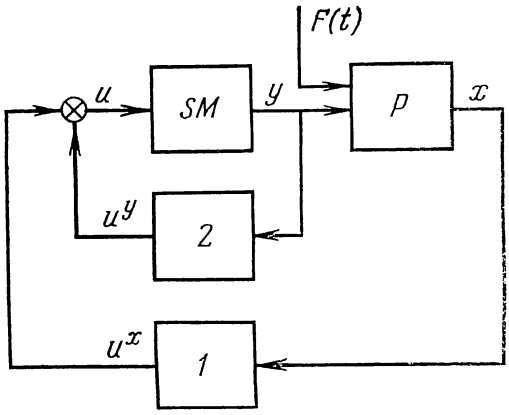

FIG. 14

The function u^x in (8.9) is selected such that with free motion (or with $F = 0$) sliding modes make x tend to zero in the desired way.

The motion of SM is described by the equations

$$y^{(m)} + \sum_{i=0}^{m-1} d_i y^{(i)} = u \quad d_i = \text{const} \tag{8.10}$$

As noted above, the control u^y is generated as

$$u^y = -\sum_{i=0}^{m-1} \overline{\Psi}_i^y y^{(i)} \tag{8.11}$$

where $\overline{\Psi}_i^y$ are coefficients with discontinuity on a certain plane $s = 0$.

With due regard for (8.11) the motion of SM can be described by the equation

$$y^{(m)} + \sum_{i=0}^{m-1} (d_i + \overline{\Psi}_i^y) y^{(i)} = u^x$$

and if

$$\overline{\Psi}_i^y = \begin{cases} -d_i + B & \text{with } y^{(i)} s > 0 \\ -d_i - B & \text{with } y^{(i)} s < 0 \end{cases} \tag{8.12}$$

$$(B = \text{const})$$

then

$$y^m + \sum_{i=0}^{m-1} \Psi_i^y y^{(i)} = u^x, \quad \Psi_i^y = \begin{cases} B \text{ with } & y^{(i)}s > 0 \\ -B \text{ with } & y^{(i)}s < 0 \end{cases} \tag{8.13}$$

The motion in sliding mode depends on the average values of Ψ_i^y ranging within*

$$B \leqslant \Psi_{y\,\mathrm{av}}^{i} \leqslant B$$

In the desired mode the coordinate x and its derivatives are zero, therefore the function u^x in (8.13) is zero and the servomechanism output satisfies the equation

$$| y^{(m)} | \leqslant B \sum_{i=0}^{m-1} | y^{(i)} | \tag{8.14}$$

If the function $F(t)$ also belongs to a rather wide class of functions (8.14), then a sliding mode can lead to values of $\Psi_{i\,\mathrm{av}}^y$ such that $y(t) \equiv -F(t)$. This implies that the output coordinate of the servomechanism rejects the disturbances which solve the problem. We will see that the desired average values of the coefficients $\Psi_{i\,\mathrm{av}}^y$ are found automatically if the structure of the servomechanism changes in compliance with (8.12). Note that the constraint (8.14) encompasses a rather wide class of functions such as polynomials of any finite power (starting with a certain time), exponential and harmonic functions and their various products, etc. The most important feature of the approach is that to be implemented it does not require direct measurement of external disturbances; the data on the process such as the plant output x and servomechanism output y are sufficient. A physical explanation of the disturbance resection effect also will be appropriate. The introduction of a discontinuous control as a function of a servomechanism output implies that a variable structure servomechanism is used because the sign of its feedback changes during the control process. In the case of positive feedback *SM* is found to be unstable and the divergent *SM* output can catch up on the disturbances. Then, in sliding

---

* This point was treated in detail in Part I; recall only that $\Psi_{i\,\mathrm{av}}^y$ can be obtained at the output of the first-order filter with a small time constant, if the input is the real value of Ψ_i^y.

mode a sequence of feedback sign changes occurs automatically such that the *SM* output tracks, or rejects, the disturbances which results in the desired operating mode.

Sec. 3. Design of Control Systems in Phase Canonic Form

Now let us proceed to derivation of computational relations which will implement the approach of Sec. 2 to design of variable structure systems intended for control of forced motion of a plant subjected to unknown disturbances*. As before, let us consider the system of Fig. 14 with a servomechanism described by equations (8.9)-(8.13). Let the plant motion be described by the linear equation

$$x^{(n-m)} + \sum_{i=0}^{n-m-1} b_i x^{(i)} = y + F(t) \tag{8.15}$$

where b_i are constant or time-varying parameters

$$b^j_{\min} \leqslant \frac{d^j b_i(t)}{dt^j} \leqslant b^j_{\max}$$

$$(j = 0, \ldots, m,\ b^j_{\min},\ b^j_{\max} = \text{const}) \tag{8.16}$$

The function $F(t)$ characterizing external disturbances is assumed to satisfy the condition (8.14) and consequently, time functions $\theta(t)$ will be found for which the condition

$$F^{(m)} = \sum_{i=0}^{m-1} \theta_i(t) F^{(i)}(t) \quad |\theta_i(t)| \leqslant B \tag{8.17}$$

hold. Now let us take up one n-th order equation instead of two equations, (8.13) and (8.15). For this reason let us first rearrange equation (8.13)

$$y^{(m)} - \theta(t) \sum_{i=0}^{m-1} y^{(i)} = -\sum_{i=0}^{m-1} (\Psi^y_i + \theta_i(t)) y^{(i)} + u^x \tag{8.18}$$

---

* All subsequent transformations for the design of a system to control forced motion will follow the reasoning described by A. I. Krasov of Leningrad in a private communication and yielding a solution simpler than in [87, 97, 98].

and differentiate equation (8.15) m times

$$y^{(j)} = x^{(n-m+j)} + \sum_{i=0}^{n-m+j-1} b_{ij}^{*}(t)\, x^{(i)} - F^{(j)}(t) \qquad j=0, 1, \ldots, m \tag{8.19}$$

where $b_{ij}^{*}(t)$ are coefficients depending on $b_0, \ldots, b_{n-m-1}$; by virtue of (8.16) these coefficients are bounded functions of time. Denoting by $x_1, \ldots, x_n$ the phase canonic variables x and by $(n-1)$ its derivatives and substituting into the left-hand side of equation (8.18) the values of $y^{(j)}$ from (8.19) yields motion equations in phase canonic form which, by virtue of the condition (8.17), are independent of $F(t)$

$$\left.\begin{aligned} \dot{x}_i &= x_{i+1} \ (i = 1, \ldots, n-1) \\ \dot{x}_n &= -\sum_{i=1}^{n} a_i(t)\, x_i + u^x - \sum_{i=0}^{m-1} \left(\Psi_i^y + \theta_i(t)\right) y^{(i)} \end{aligned}\right\} \tag{8.20}$$

where $a_i(t)$ are bounded functions depending on all b_{ij}^{*} and $\theta_i(t)$. The motion in sliding mode for such a system along any sliding plane depends, in compliance with (II.VIII), only on the coefficients of equations for this plane and therefore by properly selecting them the error can be reduced to zero after the sliding mode has been introduced. The problem of existence of a sliding plane for the system (8.20) is essentially the problem of Sec. 1 because the coordinates $y^{(i)}$ $(i = 0, \ldots, m-1)$ can be regarded as disturbances, which are accessible for measurement. Following the conclusions made earlier for the design of combined systems with variable parameters, the coefficients Ψ_i^y should vary according to equation (8.13) and the functions u^x, according to (5.6) with $k = n-1$. For the system (8.20) the first group of the inequalities (8.8) is rearranged

$$\alpha_i \geqslant \sup_t \left(c_{i-1} - a_i - c_{n-1}\, c_i + a_n\, c_i\right)$$

$$\beta_i \leqslant \inf_t \left(c_{i-1} - a_i - c_{n-1}\, c_i + a_n\, c_i\right) \ (i = 1, \ldots, n-1)$$

For Ψ_i^y of the form (8.13) conditions hold that are analogous to the second group of equalities in (8.8) (because $c^T b = 1$, $c^T d^i = \theta_i t$) and $|\theta_i(t)| \leqslant B$). As was in the case of combined systems, the reaching condition can be taken from Sec. 3 of Ch. VI. For the system (8.20) this condition is written in the

form $\sup_t (c_{n-1} - a_n) \leqslant 0$ and it makes the system stable with any initial conditions if the motion in sliding mode is stable*.

Sec. 4. Extension to Systems of an Arbitrary Form

Let us extend the approach developed for the systems in phase canonic form to the control of forced motion with measurement of disturbances represented by an equation of the general form (II.IV) being unattainable. Hence, let us consider the case where the disturbance as well as the control are scalar and the system behaviour is described by the equations

$$x^* = A^* x^* + b^* u + d^* f(t) \tag{8.21}$$

where x^* is a state vector with coordinates $x_1, \ldots, x_{n-1}, y$, u is a scalar control, $f(t)$ is a scalar disturbance, A^*, b^*, d^* are the matrix and columns of appropriate dimensionality with constant or time-varying coefficients $a^*_{ij} (i, j = 1, \ldots, n)$, b^*_i, $d^*_i (i = 1, \ldots, n)$. In the control system described by equations (8.21), there is no distinction between the plant and the servomechanism any longer. From the physical point of view, however, any system controlling forced motion should have a coordinate which offsets the influence of external disturbances. If the system succeeds, then this coordinate contains data on the magnitude of disturbances. Therefore when these disturbances cannot be measured it is a coordinate to be utilized in the design of the control system. This approach was the core of the control method of Sec. 2 and the output coordinate of the servomechanism was the coordinate we mean. Let the component y of the vector x^* be that coordinate. Let y be in one of the first $(n - 1)$ equations of the system (8.21), e.g. in the k-th equation (otherwise y would not influence the behaviour of the entire system) and, moreover, this equation is independent of the control

$$\dot{x}_k = \sum_{i=1}^{n-1} a^*_{ki} x_i + a^*_{kn} y + d^*_k f \tag{8.22}$$

---

* If the conditions for existence of a sliding plane and for reaching are represented as strict inequalities, then, according to Ch. III the relay component δ_u can be eliminated from the control (8.3).

Introduce a new coordinate

$$x_n = \sum_{i=1}^{n-1} a^*_{ki} x_i + a^*_{kn} y + d^*_k f \tag{8.23}$$

Let us deal hereafter with the system behaviour in the space $x_1, \ldots, x_n$ and characterize its state in terms of an n-dimensional vector x with these components. (With $a^*_{kn} \neq 0$ this transformation is obviously non-singular.)

Like the preceding case, let us represent the control as a sum of $(n-1)$ coordinates of the system and of the servomechanism output represented by y*

$$u = -\sum_{i=1}^{n-1} \Psi_i x_i - \Psi_y y \tag{8.24}$$

The coefficients in (8.4) are changed stepwise on a certain plane in the space $x_1, \ldots, x_n$:

$$\left.\begin{aligned} \Psi_i &= \begin{cases} \alpha_i \text{ with } x_i s > 0 \\ \beta_i \text{ with } x_i s < 0 \end{cases} \quad (i = 1, \ldots, n-1) \\ \Psi_y &= \begin{cases} B \text{ with } ys > 0 \\ -B \text{ with } ys < 0 \end{cases} \end{aligned}\right\} \tag{8.25}$$

$s = c^T x$, c is a vector with elements $c_1, \ldots, c_n$; α_i, β_i, B, $c = \text{const}$; $c_n = 1$. Now let us write the equations of motion in the space $x_1, \ldots, x_n$ using the relations

$$y = \frac{1}{a^*_{kn}} \left(x_n - \sum_{i=1}^{n-1} a^*_{ki} x_i - d^*_k f \right) \tag{8.26}$$

$$u = -\sum_{i=1}^{n-1} \Psi_i x_i + \theta^*(t) y - (\Psi_y + \theta^*(t)) y \tag{8.27}$$

where $\theta^*(t)$ is an arbitrary function satisfying the condition

$$|\theta^*(t)| \leqslant B \tag{8.28}$$

For this purpose the k-th equation in (8.21), in compliance with the notation of (8.22), is replaced by the equation $\dot{x}_k = x_n$.

---

* This control is analogous with (5.6) with $k = n-1$. In this case, as noted in Ch. III, with the fulfilment of the conditions of reaching to be described later, there is no necessity to use the relay component δ_u.

the last equation is replaced by one resulting from differentiation of the relation (8.23) along the trajectories of the system (8.21) and, finally, y is replaced by its value found in (8.26) everywhere, except the last addend in (8.27). The following system results

$$\dot{x} = Ax - b \sum_{i=1}^{n-1} \Psi_i x_i - b\,[\Psi y + \theta^*(t)]\, y + df + b\theta^*(t) f + d^1 \dot{f} \tag{8.29}$$

where the coefficients of the matrix A and the columns b, d, d' depend on the coefficients of the original system (8.21), derivatives of the coefficients of equation (8.22)*, and the function $\theta^*(t)$. As in the above cases, we assume that all the coefficients of the system (8.29) are bounded time functions.

If it is found that the choice of the coefficients c_i imparts the desired property to the motion in sliding mode, then the switching plane $s = 0$ should be made the sliding plane. Let us show that this is feasible within the framework of the control law (8.24), (8.25), or without measuring the disturbance when this belongs to the class of functions

$$|\dot{f}/f| \leqslant M \ (M = \text{const}), \text{ or } \dot{f} = \theta(t) f \tag{8.30}$$

where $\theta(t)$ is an arbitrary function satisfying the condition

$$|\theta(t)| \leqslant M \tag{8.31}$$

The constraint (8.30) is a particular case of the condition (8.24) when the servomechanism is a first-order element ($m = 1$).

To determine the conditions for the existence of the sliding plane the values of the function $\dot{s}$ as above should be computed on the plane $s = 0$ (or for $x_n = -\sum_{i=1}^{n-1} c_i x_i$) in compliance with the system (8.29)

$$\dot{s} = \sum_{i=1}^{n-1} [c^T a^i - c_i\,(c^T a^n) - (c^T b)\Psi_i] x_i - (c^T b)\,(\Psi y + \\ + \theta^*(t))\, y + (c^T d) f + (c^T b)\,\theta^*(t) f + (c^T d^1) \dot{f} \tag{8.32}$$

* Note that the derivatives of a_k^i and f are represented only in the last equation of the system (8.29).

Since $\theta^*(t)$ is an arbitrary bounded time function, select it as follows:

$$\theta^*(t) = -\frac{(c^T d^1)\,\theta(t) + c^T d}{c^T b} \tag{8.33}$$

Then by virtue of (8.30), (8.32) and (8.33) the value of $\dot{s}$ is independent of the disturbance which cannot be measured. As to the coordinate y, it may be regarded as a disturbance accessible for measurement, therefore the method of Sec. 1 for the design of combined variable structure systems is applied to determine the coefficients of control (8.24), (8.25). As a result, the coefficients α_i, β_i, $(i = 1, \ldots, n-1)$ and B should satisfy the conditions

$$\left.\begin{aligned} &\operatorname{sign}(c^T b)\,\alpha_i > \sup_t |\, c^T b \,|^{-1} [c^T a^i - c_i (c^T a^n)] \\ &\operatorname{sign}(c^T b)\,\beta_i < \inf_t |\, c^T b \,|^{-1} [c^T a^i - c_i (c^T a^n)] \\ &\qquad\qquad (i = 1, \ldots, n-1) \\ &\operatorname{sign}(c^T b) B > \sup_t \theta^*(t) \end{aligned}\right\} \tag{8.34}$$

With due regard for (8.31), (8.33) the latter inequality should be written down in the form

$$\operatorname{sign}(c^T b)\, B > \sup_t \frac{|\, c^T d^1 \,|\, M + |\, c^T d \,|}{|\, c^T b \,|} \tag{8.35}$$

The inequalities (8.34), (8.35) are the conditions of existence of a sliding plane. Since there is no relay component δ_u in the control, then unlike the combined system of Sec. 1 the reaching condition is a strict inequality

$$\sup_t (c^T a^n) < 0$$

Consequently, starting with a certain time, the existence of a sliding mode also can be guaranteed in variable structure systems controlling forced motion. The most important feature of this control law is that its implementation does not require direct measurement of external disturbances. Of course, motion in sliding mode, generally speaking, does depend on disturbances but its nature can be changed by using the coefficients c_i in the equation of the sliding plane on which no constraints are imposed.

To implement the control law, the quantity x_n should be used which is a time derivative of one of the system coordinates. Differentiation also can be effected with the use of sliding modes generated in linear filters with variable structures. One of the methods for design of such a filter is described in Ref. [33].

In conclusion, let us note that the method for control of forced motion of systems (8.21) is not confined to disturbances of the class (8.30). Monograph [45] deals with a possible approach resulting in motion in sliding mode for disturbances belonging to the class (5.14) with $m > 1$ which cannot be measured. This approach requires introduction of an m-th order dynamic subsystem into the system; the subsystem is used as a servomechanism in the design of a control for the system of Sec. 3. In a number of cases, however, some of the equations of the original system can be regarded as equations of this dynamic subsystem.

Part III

VECTOR CONTROL PROBLEMS

This part is devoted to principles underlying the design of systems with discontinuous controls under the assumption that the control is a vector quantity. Main attention will be given to the control of linear plants described by the equations

$$\dot{x} = A(t)\,x + D(t)\,F(t) + B(t)\,u \qquad \text{(III.I)}$$

where x is an n-dimensional state vector; $A(t)$ is an $n \times n$ matrix with elements $a_{ij}(t)$; $D(t)$ is an $n \times l$ matrix with elements $d_{ij}(t)$; $F(t)$ is an l-dimensional disturbance vector with elements $f_i(t)$; $B(t)$ is an $n \times m$ matrix with elements $b_{ij}(t)$ and u is an m-dimensional control vector with components u_i.

As before, cases of free ($F(t) \equiv 0$) and forced ($F(t) \not\equiv 0$) motion of time-invariant and time-varying plants will be treated.

The design methods will involve deliberate introduction of motion in sliding mode which, unlike the scalar cases, takes place at the intersection of several discontinuity surfaces rather than on a single surface.

The methods to be discussed in this Part are the extensions of the approaches outlined in Ch. IV and, to a considerable degree, generalization of Part II. It also would be appropriate to recall that this extension requires the development of special method because the feasibility of sliding modes is ascertained in vector cases by solving the problems of stability for a nonlinear system rather than in the straightforward way which followed from the conditions (1.9) for scalar cases.

An attractive feature of systems with a vector control is that their sliding equations can be "influenced" to a large extent

because they depend on all components of the gradient vectors of the discontinuity surfaces.

In addition to problems discussed in Part II for the scalar case, this Part will treat three new statements of problems. In the first, the class of systems is detected in which sliding motions are invariant with external disturbances and varying plant parameters (a particular case of such systems are the systems which are described by equations (II.VII)). Solution of the second problem requires development of a self-optimizing system in which input parameters that would take the output quantity to its extremum are sought. This nonlinear problem also will be treated for the case when the extremum should be found with constraints on the input parameters. Finally, the identification of dynamic plants by using models with a variable structure will be discussed.

When forming a control in the system (III.I) let us choose linear equations of surfaces on which the components of the vector u have discontinuities specified by (2.3), i.e.

$$s_i = c_i x = 0 \quad (i = 1, \ldots, m) \tag{III.II}$$

where c_i is an n-dimensional row-vectors with constant elements $c_{ij} (j = 1, \ldots, n)$.

Assuming that for the system under discussion the equivalent control method works, let us write an equation of sliding mode along the intersection of all discontinuity surfaces

$$s = 0 \quad \text{if} \quad s = Cx \tag{III.III}$$

where s is an m-dimensional column vector with elements $s_1, \ldots, s_m$; C is an $m \times n$ matrix whose rows are vectors c_i. First the equation $\dot{s} = CAx + CDF + CBu = 0$ should be solved for u and the result substituted into the original system. Then the coordinates $x_{n-m+1}, \ldots, x_n$ as functions of $x_1, \ldots, x_{n-m}$ should be found from the system $Cx = 0$ and substituted into the first $n - m$ equations. Such a procedure results in the following $(n - m)$-th order system

$$\dot{x}^m = A_m x^m + D_m F \tag{III.IV}$$

where x^m is a column vector with components $x_1, \ldots, x_{n-m}$,

$$A_m = A'_m - A'_{n-m}(C'')^{-1}C' - B'(CB)^{-1}[C'(A'_m -$$

$$- A'_{n-m}(C'')^{-1}C') + C''(A''_m - A''_{n-m}(C'')^{-1}C']$$

$$D_m = D' - B'(CB)^{-1}CD$$

$$A = \begin{matrix} n-m \\ m \end{matrix}\left\{\begin{array}{c|c} \overbrace{A'_m}^{n-m} & \overbrace{A'_{n-m}}^{m} \\ \hline A''_m & A''_{n-m} \end{array}\right\}$$

$$B = \begin{matrix} n-m \\ m \end{matrix}\left\{\begin{array}{c} B' \\ \hline \underbrace{B''}_{m} \end{array}\right\}$$

$$D = \begin{matrix} n-m \\ m \end{matrix}\left\{\begin{array}{c} D' \\ \hline \underbrace{D''}_{l} \end{array}\right\}$$

$$C = \left\{\underbrace{C'}_{n-m} \;\; \underbrace{C''}_{m}\right\} m$$

If a sliding mode described by equations (III.IV) exists in any point of the manifold (III.III), this will be referred hereafter as a sliding manifold.

Let us assume that depending on the control objective, $n \times m$ free parameters can be used to impart the desired properties to the motion in sliding mode. Then let us try to find the components of the control for the system with vector control such that the manifold $s = 0$ defined by the coefficients c_{ij} is a sliding manifold and the describing point reaches this manifold from any initial position. Note that with increasing dimensionality of the control vector the design of the linear system (III.IV) is simplified since the order of this system decreases and the number of free parameters increases.

Chapter IX

CONTROL OF FREE MOTION IN LINEAR PLANTS

Sec. 1. Conditions for Existence of a Sliding Manifold for Time-Invariant Plants

The equations of a system controlling free motion of a time-invariant plant are of the form

$$\dot{x} = Ax + Bu \tag{9.1}$$

The system (9.1) is different from (III.I) in that the matrices A and B are constant and the disturbance vector $F(t)$ is not represented.

As was shown in Part I, the existence of a sliding manifold is ascertained by solving the problem of stability for motion projection on the subspace $(s_1, \ldots, s_m)$ "in small" for all vectors x on this manifold. An equation of this motion can be obtained by differentiating the vector $s = Cx$ along the trajectories of system (9.1) with due regard for the equation $s = Cx = 0$

$$\dot{s} = Hx^m + CBu \tag{9.2}$$

where x^m is an $(n - m)$-dimensional column vector $x_1, \ldots, x_{n-m}$, H is an $m \times (n - m)$ matrix with elements h_{ij}

$$H = C'\left(A'_m - A'_{n-m}(C'')^{-1}C'\right) + C''\left(A''_m - A''_{n-m}(C'')^{-1}C'\right)$$

and the matrices A'_m, A''_m, A'_{n-m} and A''_{n-m} are found through (III. IV).

To determine the control which would insure the existence of a sliding manifold let us use the design methods of Ch. IV.

Let us first take up both versions of the diagonalization method. The first version implies, in compliance with (4.7) that the control vector is of the form

$$u = (CB)^{-1}Qu^* \tag{9.3}$$

where u^* is an m-dimensional vector whose each component u_i^* has discontinuities on the plane $s_i(x) = 0$ and Q is an arbi-

trary diagonal matrix with nonzero elements q_i $(i = 1, \ldots, m)$. For the control (9.3) the system (9.2) is rearranged

$$\dot{s} = H''(x^m)'' + H'(x^m)' + Qu^* \tag{9.4}$$

In (9.4) $(x^m)'$ and $(x^m)''$ are r- and $(n - m - r)$-dimensional column vectors with elements $(x_1, \ldots, x_r)$ and $(x_{r+1}, \ldots, x_{n-m})$ $(1 \leqslant r \leqslant n - m)$ respectively and the matrices H' and H'' consist of columns of the matrix H

$$H = \| \underbrace{H'}_{r} \vdots \underbrace{H''}_{n-m-r} \|$$

In compliance with this decomposition select each of the components u_i^* as a piecewise continuous function of r coordinates $x_1, \ldots, x_r$

$$u_i^* = -\sum_{j=1}^{r} \Psi_{ij} x_j - \delta_{ui} \tag{9.5}$$

$$\Psi_{ij} = \begin{cases} \alpha_{ij} & \text{with } x_j s_i > 0 \\ \beta_{ij} & \text{with } x_j s_i < 0 \end{cases} \quad (i = 1, \ldots, m, j = 1, \ldots, r)$$

$$\delta_{ui} = \begin{cases} \delta_{i0} & \text{with } s_i > 0 \\ \delta_{i0} & \text{with } s_i < 0 \end{cases}$$

α_{ij}, β_{ij} are constant coefficients, δ_{i0} are small quantities whose signs are the same as that of q_i. Various combinations of the values of coefficients Ψ_{ij} give 2^{rm} linear structures, which means that in the case of systems with vector control the solution also is sought in the class of variable structure systems.

Since the matrix Q is diagonal, or s_i depends only on the i-th component of the vector u^*, the conditions for existence of a sliding mode on each of the planes can be treated separately. Evidently, with the fulfilment of the relations

$$\left.\begin{aligned} &q_i \alpha_{ij} \geqslant h_{ij} \\ &q_i \beta_{ij} \leqslant h_{ij} (i = 1, \ldots, m, \; j = 1, \ldots, r) \\ &H'' = 0 \text{ or} \\ &h_{ij} = 0 \; (i = 1, \ldots, m, \; j = r + 1, \ldots, n - m) \end{aligned}\right\} \tag{9.6}$$

the condition (1.9) for existence of a sliding mode on each of the planes $s_i = 0$ in the vicinity of the intersection $s = 0$ always

holds. This implies that for the system (9.1) with a control (9.3), (9.5) the manifold $s = 0$ is a sliding manifold.

Let us now take up the second version of the diagonalization method whereby the selected (to comply with the desired form of sliding equation) discontinuity surfaces $s = 0$ are replaced by new planes $s^* = 0$ in compliance with the linear transformation

$$s^* = \Omega s \tag{9.7}$$

where $\det \Omega \neq 0$, s^* is an m-dimensional vector with components s_i^*.

As was shown in Ch. IV, sliding equations are invariant with this transformation of discontinuity surfaces. Therefore a matrix Ω should be selected such that the projection of the system motion on the subspace $(s_1^*, \ldots, s_m^*)$ is described by equations of the form (9.4). If $\Omega = Q\ (CB)^{-1}$, then by virtue of (9.2), (9.7) this condition will be met:

$$\dot{s}^* = \overline{H}''(x^m)'' + \overline{H}'(x^m)' + Qu \tag{9.8}$$

where

$$\| \underbrace{\overline{H}'}_{r} \ \underbrace{\overline{H}''}_{n-m-r} \| = \overline{H},\ \overline{H} = Q(CB)^{-1}H$$

Since the matrix Q in (9.8) is diagonal, for the manifold $s^* = 0$ to be a sliding manifold the control u should be selected as in (9.5) and the conditions, analogous to (9.6) should be met

$$u_i = -\sum_{j=1}^{r} \Psi_{ij}\, x_j - \delta_{ui} \tag{9.9}$$

$$\left.\begin{aligned}
&\Psi_{ij} = \begin{cases} \alpha_{ij} \text{ with } x_j s_i^* > 0 \\ \beta_{ij} \text{ with } x_j s_i^* < 0 \end{cases} \quad (i = 1, \ldots, m, j = 1, \ldots, r) \\
&\delta_{ui} = \begin{cases} \delta_{i0} \text{ with } s_i^* > 0 \\ -\delta_{i0} \text{ with } s_i^* < 0 \end{cases} \\
&q_i \alpha_{ij} \geqslant \bar{h}_{ij} \\
&q_i \beta_{ij} \leqslant \bar{h}_{ij}\ (i = 1, \ldots, m, j = 1, \ldots, r) \\
&\overline{H}'' = 0 \text{ or} \\
&\bar{h}_{ij} = 0\ (i = 1, \ldots, m, j = r + 1, \ldots, n - m)
\end{aligned}\right\} \tag{9.10}$$

(in (9.10) $\bar{h}_{ij}$ are elements of the matrix $\bar{H}$). Note that because the matrix $Q(CB)^{-1}$ in (9.8) is nonsingular, the equations $H'' = 0$ and $\bar{H}'' = 0$ and thus the conditions in the form of equalities in (9.4) and (9.10) are equivalent. Both versions of the diagonalization method result in the same sliding equations. In the second case each component u_i of the control vector $\bar{u}$ has discontinuities only on a single plane $s_i^* = 0$ whereas in the first case it has discontinuities on all planes since any component u_i consists of a sum of functions $u_1^*, \ldots, u_m^*$ which have discontinuity points on the associated planes $s_i = 0$.

Let us now use both versions of the design described in Sec. 4, Ch. IV, which require Lyapunov's function as a quadratic form. Choose a certain symmetric constant matrix D which satisfies the Silvester criterion.

In the first version a new control u^* is introduced whose components have discontinuities on the surfaces chosen to fit the desired nature of motion. This control is related with the vector u by the linear transformation

$$u = (CB)^{-1}Du^* \tag{9.11}$$

As in the first version of a diagonalization method we choose the control u^* in the form (9.5) and write it in the form

$$u^* = -u^0 - U \operatorname{sign} s \tag{9.12}$$

where u^0 is an m-dimensional vector with components

$$u_i^0 = \sum_{j=1}^{r} \frac{\alpha_{ij} + \beta_{ij}}{2} x_j \quad (i = 1, \ldots, m)$$

U is a diagonal $m \times m$ matrix with nonzero elements

$$U_i = \sum_{j=1}^{r} \frac{\alpha_{ij} - \beta_{ij}}{2} | x_j | + \delta_{0i} \quad (i = 1, \ldots, m)$$

sign s is an m-dimensional vector with components sign s_i. In the variable structure system (9.1) with the control (9.11), (9.12) equation (9.2) describing the motion projection on the subspace s is of the form

$$\dot{s} = Hx^m - Du^0 - DU \operatorname{sign} s \tag{9.13}$$

The Lyapunov function for this system is represented as a positive definite quadratic form

$$v = \frac{1}{2} s^T D^{-1} s$$

The time derivative of this function is found in compliance with (9.13)

$$\dot{v} = s^T (D^{-1} H x^m - u^0) - s^T U \text{ sign } s$$

The decomposition of the vector Hx^m into two addends used in (9.4) and representation of the vector u^* in the form (9.12) make it possible to rearrange the equation for $\dot{v}$

$$\dot{v} = s^T D^{-1} H'' (x^m)'' + s^T H^* (x^m)' -$$

$$- \sum_{i=1}^{m} \left(\sum_{j=1}^{r} \frac{\alpha_{ij} - \beta_{ij}}{2} | x_j | + \delta_{0i} \right) | s_i |$$

where $H^* = D^{-1} H'' - U^0$, U^0 is an $m \times r$ matrix with elements $U^0_{ij} = \frac{\alpha_{ij} - \beta_{ij}}{2}$. Since the components of the vector $(x^m)'$ are the coordinates $x_1, \ldots, x_r$, then from this relation we find the conditions under which the function $\dot{v}$ is negative definite

$$\left.\begin{array}{l} H'' = 0 \text{ or } h_{ij} = 0 \\ \qquad (i = 1, \ldots, m, \quad j = r+1, \ldots, n-m) \\ \dfrac{\alpha_{ij} - \beta_{ij}}{2} \geqslant | h^*_{ij} | \quad (i = 1, \ldots, m, \quad j = 1, \ldots, r) \end{array}\right\} \qquad (9.14)$$

where h^*_{ij} are elements of the matrix H^*. Since the functions v and $\dot{v}$ have different signs in the vicinity of any point of the manifold $s = 0$, then, in compliance with Ch. III, this manifold is a sliding manifold.

The second version of the method requiring the use of quadratic forms implies the replacement of the already selected discontinuity planes by new planes in compliance with the linear transformation (9.7). Select the matrix Ω equal to $D(CB)^{-1}$ and the control u in compliance with (9.9). In this case, following the approach which led to equation (9.13), an equation can be written which describes the motion projection on the subspace $s^* = 0$

$$\dot{s}^* = D(CB)^{-1} Hx^m - Du^0 - DU \text{ sign } s^*$$

The function v also is selected as a positive definite quadratic form $\frac{1}{2} s^{*T} D^{-1} s^*$; then its time derivative will be

$$\dot{v} = s^T (CB)^{-1} H'' (x^m)'' + s^T \overline{H}^* (x^m)' - \sum_{i=1}^{m} \left(\sum_{j=1}^{r} \frac{\alpha_{ij} - \beta_{ij}}{2} | x_j | + \delta_{0i} \right) | s_i |$$

where $\overline{H}^* = (CB)^{-1} H' - U^0$. The conditions under which the manifold $s^* = 0$ is a sliding manifold are analogous to the conditions (9.14)

$$\left.\begin{array}{l} H'' = 0 \text{ or } h_{ij} = 0 \\ \quad (i = 1, \ldots, m, \ j = r+1, \ldots, n-m) \\ \dfrac{\alpha_{ij} - \beta_{ij}}{2} \geqslant | \overline{h}^*_{ij} | \\ \quad (i = 1, \ldots, m, \ j = 1, \ldots, r) \end{array}\right\} \qquad (9.15)$$

where $\overline{h}^*_{ij}$ are elements of the matrix $\overline{H}^*$. Conditions such as the equalities in (9.14) and (9.15) can be met by increasing the values of $\alpha_{ij} - \beta_{ij}$ while the sums $\alpha_{ij} + \beta_{ij}$ which are represented in the right-hand sides of these inequalities, remain constant. It is important to note that the resultant conditions imposed on coefficients of the matrix C and on the coefficients α_{ij} and β_{ij} are obtained as sufficient conditions. With r being fixed, the equality $H'' = 0$ which is included into all groups of conditions is easily seen to be also a necessary condition. Actually, when this condition is not observed, the components of the vector x on the manifold $s = 0$ as it follows from (9.2) can be selected, such that $(x^m)'$ and hence, CBu are equal to zero and the vector Hx^m equal to $H''(x^m)''$ is other than zero. Since in the point selected in this way the value of $\dot{s}$ is other than zero then the phase trajectory passing through it lies outside the manifold $s = 0$ and, consequently, no motion in sliding mode is possible*.

In all methods discussed in this section, the discontinuity surfaces and hence the sliding equations cannot be chosen arbitrarily. The constraints are imposed by the conditions for exi-

* Similarly one can prove that the condition $H'' = 0$ also is necessary for a sliding manifold to exist in the case when discontinuity surfaces are replaced by using some linear transformation.

stence of a sliding manifold, (9.6), (9.10), (9.14) or (9.15) which depend on the coefficients of equations of discontinuity surfaces (III. III). (The only exception is the case when $r = n - m$ and there are no equality-like constraints.) Therefore in Sec. 2 we will discuss stability of motion along the sliding manifold.

We thus have made use of all the approaches suggested in Ch. IV except the control hierarchy method. As noted in Part I, in the latter method, unlike all others, no precise knowledge of elements of the matrix CB is needed. This fact is very important in design of control systems for time-varying plants. Therefore in Sec. 4 below the specifics of using this method in systems with time-invariant plants and in Sec. 5 an extension to plants with time-varying parameters will be made.

Sec. 2. Conditions for Stability of Sliding Motions

Let us find under what conditions for the system (9.1) the motion along the sliding manifold (III. III) described by equations (III. IV) with $F(t) \equiv 0$ is stable. In solving this problem let us follow the approach which led to the conditions for stability of sliding motions for scalar cases, Sec. 3, Ch. V.

Let us find the vector x^{n-m} with components $x_{n-m+1}, \ldots, x_n$ as a function of $x_1, \ldots, x_{n-m}, s_1, \ldots, s_m$ from the equation $s = Cx$:

$$x^{n-m} = (C'')^{-1} s - (C'')^{-1} C' x^m \tag{9.16}$$

Substituting the resultant value of the vector x^{n-m} into the first $n - m$ equations of the system (9.1) and the function $\dot{s}$ along the trajectories of the system (9.2) yields the motion equations in the space $x_1, \ldots, x_{n-m}, s_1, \ldots, s_m$:

$$\left.\begin{aligned} \dot{x}^m &= [A'_m - A''_{n-m}(C'')^{-1} C'] x^m + A'_{n-m}(C'')^{-1} s + B'u \\ \dot{s} &= A_s s + H x^m + CBu \end{aligned}\right\} \tag{9.17}$$

where $A_s = C' A'_{n-m}(C'')^{-1} + C'' A''_{n-m}(C'')^{-1}$. In (9.16) and (9.17) the matrices C', C'', A'_m, A''_m, A'_{n-m}, A''_{n-m}, H are determined from the relations (III. IV) and (9.2).

Equations (9.17), which are equivalent to the system (9.1), should be made use of in order to prove the theorem, formulated below on the conditions for stability of motion along the sliding manifold in the system (9.1).

Theorem. *For asymptotic stability of motion for the system* (9.1) *in sliding mode along the manifold* $s = 0$, (III. III) *it is necessary and sufficient that all the eigenvalues of the system* (9.1) *with* $u = u_{eq}$ *computed with* $s = 0$ *except those coinciding with eigenvalues of the matrix* A_s *have negative real parts.*

We will not give the proof of the theorem since it completely coincides with that of an analogous theorem formulated and proved in Sec. 3, Ch. V, for systems with scalar control.

Let us use this theorem to obtain a variable structure system in which the intersection of discontinuity planes is a sliding manifold and the motion in sliding mode along this manifold is asymptotically stable.

Let each component of the vector u be obtained as a sum of r components $x_1, \ldots, x_r$ of the vector $(x^m)'$ with discontinuous coefficients without specifying the switching law for these coefficients*. Let us show that in this case the existence of a sliding manifold $s = 0$ with asymptotically stable motion can be insured if there exists a linear control $u = \Gamma (x^m)'$ (Γ is a constant $m \times r$ matrix with elements γ_{ij}) for n—m eigenvalues $\lambda_1, \ldots, \lambda_{n-m}$ with negative real parts of the system (9.1). The remaining m eigenvalues $\lambda_{n-m+1}, \ldots, \lambda_n$ can be anything; it only will be assumed that if this group includes some complex eigenvalue, then it also includes its conjugate eigenvalue.

Thus with $u = \Gamma (x^m)'$ the behaviour of the system (9.1) is described by the equation

$$\dot{x} = A^* x \tag{9.18}$$

where $A^* = A + B\bar{\Gamma}$; in the $m \times n$ matrix $\bar{\Gamma}$ the first r columns are the same as in the matrix Γ and the remaining ones are zero. The eigenvalues of the matrix A^* are $\lambda_1, \ldots, \lambda_n$.

Let us treat separately two cases where λ_n is real and λ_{n-1} and λ_n are complex and conjugate. In the first case introduce a new coordinate s_m:

$$s_m = c_m x$$

---

* Only those cases are of interest where $r < n - m$. In the case of $r = n - m$ (and evidently for $r > n - m$) the conditions for the existence of a sliding manifold (9.6), (9.10), (9.14) or (9.15) do not include equalities, or these conditions may be met for any matrix C with appropriate choice, of α_{ij} and β_{ij}. This implies that sliding equations (III. IV) with $F = 0$ depending on C generally can be given any properties, stability including.

and select a row vector c_m with components $c_{m1}, \ldots, c_{mn}$ such that the behaviour of the coordinate s_m be described by the equation

$$\dot{s}_m = \lambda_n s_m$$

For this purpose the vector c_m should satisfy the equation

$$c_m A^* - \lambda_n c_m = 0$$

Since λ_n is a real eigenvalue of the matrix A^*, then this equation has a real nontrivial solution. Assume that $c_{mn} \neq 0$. Then expressing the coordinate x_n in terms of s_m and of the coordinates $x_1, \ldots, x_{n-1}$ which represent the vector x^1, equations may be obtained which describe the behaviour of the system (9.18) in the space $x_1, \ldots, x_{n-1}, s$

$$\dot{x}^1 = A_1^* x^1 + a_s^m s_m$$

$$\dot{s}_m = \lambda_n s_m$$

where A_1^* and a_s^m are an $(n-1) \times (n-1)$ matrix and an $(n-1)$-dimensional column vector. This system results from replacement of the last equation of the system (9.18) by an equation for s_m and from elimination of the coordinate x_n which is a linear combination of $x_1, \ldots, x_{n-1}, s_m$ from the first $(n-1)$ equations.

In the second case where λ_{n-1} and λ_n are complex conjugate eigenvalues, we introduce new variables s_{m-1} and s_m:

$$s_{m-1} = c_{m-1} x, \; s_m = c_m x$$

where the n-dimensional row vectors c_{m-1} and c_m satisfy the relations

$$c_{m-1} = \overset{*}{c}_{m-1} + \overset{*}{c}_m, \; c_m = j(\overset{*}{c}_{m-1} - \overset{*}{c}_m)$$

and the n-dimensional row vectors $\overset{*}{c}_{m-1}$ and $\overset{*}{c}_m$ are the solutions to the equations

$$\overset{*}{c}_{m-1} A^* - \lambda_{n-1} \overset{*}{c}_{m-1} = 0, \; \overset{*}{c}_m A^* - \lambda_n \overset{*}{c}_m = 0$$

Since λ_{n-1} and λ_n are complex and conjugate eigenvalues of the matrix A^*, these equations have nontrivial solutions which are also complex and conjugate and, therefore, the vectors c_{m-1} and c_m are real. Following the differentiation

of s_m and s_{m-1} and the appropriate transformations, we have a system of two differential equations for these variables

$$\dot{s}_{m-1} = \frac{1}{2}(\lambda_{n-1} + \lambda_n) s_{m-1} - \frac{1}{2} j(\lambda_{n-1} - \lambda_n) s_m$$

$$s_m = \frac{1}{2} j(\lambda_{n-1} - \lambda_n) s_{m-1} + \frac{1}{2}(\lambda_{n-1} + \lambda_n) s_m$$

It is easily seen that all the coefficients of this system are real and its eigenvalues are equal to λ_{n-1} and λ_n. The vectors c^*_{m-1} and c^*_m are eigenvectors of the matrix A^* associated with different eigenvalues; therefore they are linearly independent. This implies that the vectors c_{m-1} and c_m are also independent. Therefore, from the equations for s_{m-1} and s_m, one can express two coordinates, e.g. x_{n-1} and x_n in terms of the coordinates $x_1, \ldots, x_{n-2}$ which make the vector x^2 and new coordinates s_{m-1} and s^2_m. Substituting the resultant values of x_{n-1} and x_n into the first equations of the system (9.18) and replacing the last two equations by differential equations for s_{m-1} and s_m we find the motion equations of the system (9.18) in the space $x_1, \ldots, x_{n-2}, s_{m-1}, s_m$:

$$\dot{x}^2 = A^*_2 x^2 + a^{m-1}_s s_{m-1} + a^m_s s_m$$

$$\dot{s}_{m-1} = \frac{1}{2}(\lambda_{n-1} + \lambda_n) s_{m-1} - \frac{1}{2} j(\lambda_{n-1} - \lambda_n) s_m$$

$$\dot{s}_m = \frac{1}{2} j(\lambda_{n-1} - \lambda_n) s_{m-1} + \frac{1}{2}(\lambda_{n-1} + \lambda_n) s_m$$

where A^*_2 is an $(n-2)\times(n-2)$ matrix, a^{m-1}_s, a^m_s are $(n-2)$-dimensional column vectors. Following the above nonsingular transformations of coordinates the eigenvalues of the matrix A^*_1 are found to be equal to $\lambda_1, \ldots, \lambda_{n-1}$ and the matrices A^*_2 to $\lambda_1, \ldots, \lambda_{n-2}$.

Now in the system of differential equations for the vector x^1 (or x^2) the coordinate s_m (or the coordinates s_{m-1} and s_m) will be regarded as the input. In these systems, we replace the variables and obtain one (or two, in the case of complex eigenvalue) more equation which is independent of the remaining coordinates of the vector x. Following an appropriate number of transformations in which all the eigenvalues $\lambda_{n-m+1}, \ldots,$

x_n "are used" and replacing the coordinates $x_{n-m+1}, \ldots, x_n$ by new coordinates $s_1, \ldots, s_m$* we obtain a motion equation which describes the behaviour of the system (9.18) in the space of coordinates $x_1, \ldots, x_{n-m}, s_1, \ldots, s_m$ or, for short, in the space (x^m, s)

$$\left.\begin{aligned} \dot{x}^m &= A_m^* x^m + A_{xs}\, s \\ \dot{s} &= A_s^*\, s \end{aligned}\right\} \tag{9.19}$$

where A_m^*, A_{xs}, A_s^* are matrices of the dimensions $(n-m) \times (n-m)$, $(n-m) \times m$, $m \times m$, and the eigenvalues of the matrix A_s^* are equal to $\lambda_{n-m+1}, \ldots, \lambda_n$ and of the matrix A_s, to $\lambda_1, \ldots, \lambda_{n-m}$.

The vector s is equal to Cx and the rows of the $m \times n$ matrix C with real coefficients are computed at each step of the above procedure. At each step the transformation of coordinates is nonsingular, therefore the matrix

$$\begin{array}{c} n-m \\ m \end{array}\left\{\begin{array}{c|c} E & 0 \\ \hline C' & C'' \\ \underbrace{}_{n-m} & \underbrace{}_{m} \end{array}\right.$$

which transforms the vector x into the vector (x^m, s) is also nonsingular. Hence, $\det C'' \neq 0$ and the matrix $(C'')^{-1}$ does exist.

Once the properties of the system (9.18) have been described, select the planes $s_i = 0$ $(i = 1, \ldots, m)$ to serve as the planes on which the components of the control vector u in the system (9.1) have discontinuities. The behaviour of this system in the space (x^m, s) is described by the equations (9.17). Note that with the vector s selected, these equations are always legitimate because the matrix $(C'')^{-1}$ does exist. Assume that a sliding mode starts on the manifold $s = 0$. Then by virtue of the theorem proved in this section, this motion is asymptotically stable, if the system with $u = u_{eq}$ computed with $s = 0$ has $n - m$ eigenvalues with negative real parts (the remaining m eigenvalues

* The replacement of one or two components of the vector x by new coordinates from the set $s_1, \ldots, s_m$ is always possible at each step. Let us consider the cases when all steps result in elimination of the coordinate $x_{n-m+1}, \ldots, x_n$.

coincide with those of the matrix A_s. The function u_{eq} is a solution of the equation $\dot{s} = 0$ for u^* with $s = 0$

$$u_{eq} = -(CB)^{-1}Hx^m$$

Since the systems (9.17) and (9.19) are equivalent with $u = \Gamma(x^m)'$, then

$$A_s^* = A_s, \quad \Gamma(x^m)' = -(CB)^{-1}Hx^m \tag{9.20}$$

It follows from the resultant relations that $u_{eq} = \Gamma(x^m)'$ and with $u = \Gamma(x^m)'$ all system eigenvalues except eigenvalues of the matrix A_s^* or A_s have negative real parts. This implies that motion along the manifold $s = 0$ in sliding mode, if it starts in the system (9.1), is asymptotically stable.

Let us now verify that if the components of the vector u are piecewise linear combinations of the r components $x_1, \ldots, x_r$ of the vector $(x^m)'$, then the intersection of the planes $s_i = 0$ $(i = 1, \ldots, m)$ can be made a sliding manifold. Section 1 has dealt with various ways of solving this problem and in all cases the condition $H'' = 0$ had to be met. (Recall that the vector Hx^m was represented as $H'(x^m)' + H''(x^m)''$, $(x^m)''$ being a vector with components $x_{r+1}, \ldots, x_{n-m}$.) From the last equation in (9.20) which should be valid with any values of the vector x^m it follows that the condition $H'' = 0$ holds. As for other conditions for existence of the inequality-like sliding manifold given in (9.6), (9.10), (9.14) and (9.15) these always can be met by appropriate choice of the values of discontinuous coefficients in the control vector.

Consequently, the design problem for a variable structure system with an asymptotically stable motion along the sliding manifold is reduced, first, to finding a linear control $u = \Gamma(x^m)'$ resulting in $n - m$ eigenvalues with negative real parts and, second, to computing the coefficients in equations of discontinuity planes in compliance with the above procedure and, finally, to determination of discontinuous control coefficients whose components are made of the coordinates of the vector $\Gamma(x^m)'$.

Let us illustrate this method of finding a control which would insure the existence of a sliding manifold with asympto-

---

* The cases of a singular matrix CB are disregarded.

tically stable motion with a fourth-order system whose control is two-dimensional and described by the equations

$$\left.\begin{aligned}\dot{x}_1 &= x_2\\ \dot{x}_2 &= x_3\\ \dot{x}_3 &= x_4 + u_2\\ \dot{x}_4 &= u_1\end{aligned}\right\} \text{ i.e. } A = \left|\begin{matrix}0&1&0&0\\0&0&1&0\\0&0&0&1\\0&0&0&0\end{matrix}\right|, B = \left|\begin{matrix}0&0\\0&0\\0&1\\1&0\end{matrix}\right|$$

$$u = \left|\begin{matrix}u_1\\u_2\end{matrix}\right|, n = 4, m = 2$$

First, a linear control $u = \Gamma (x^m)'$ resulting in two eigenvalues with negative real parts is to be found. This condition holds with $u_1 = -14x_1$ and $u_2 = -15x_1$ (or $(x^m)' = x_1$) because the roots of the characteristic equation

$$\det | A - pE | = 0 \text{ or } p^4 + 15p + 14 = 0$$

are equal to

$$\lambda_1 = -1 \quad \lambda_2 = -2 \quad \lambda_3 = \frac{3}{2} + j\frac{\sqrt{19}}{2}$$

$$\lambda_4 = \frac{3}{2} - j\frac{\sqrt{19}}{2}$$

The next step is the determination of equations for discontinuity planes. Since the roots λ_3 and λ_4 are complex conjugate, then first eigenvectors $c_1^* = (c_{11}^*, c_{12}^*, c_{13}^*, c_{14}^*)$ and $c_2^* = (c_{21}^*, c_{22}^*, c_{23}^*, c_{24}^*)$ of the matrix

$$A^* = A + B\,\overline{\Gamma},\ \overline{\Gamma} = \left|\begin{matrix}-14&0&0&0\\-15&0&0&0\end{matrix}\right|$$

should be found which are the solutions of the equations

$$c_1^* A^* - \lambda_3 c_1^* = 0 \text{ and } c_2^* A^* - \lambda_4 c_2^* = 0$$

Since the vectors c_1^* and c_2^* are conjugate, it would be sufficient to solve one of these equations, e.g. for c_1^* which for the case of $c_{14}^* = 1$ is of the form

$$-15c_{13}^* - 14 = \lambda_3 c_{11}^*$$

$$c_{11}^* = \lambda_3 c_{12}^*$$

$$c_{12}^* = \lambda_3 c_{13}^*$$

$$c_{13}^* = \lambda_3$$

From the last three equations it follows that

$$c_{13}^* = \frac{3}{2} + j\frac{\sqrt{19}}{2} \qquad c_{12}^* = \lambda^2 c_{13}^* = -\frac{5}{2} + j\frac{3\sqrt{19}}{2}$$

$$c_{11}^* = \lambda^3 c_{13}^* = -18 + j\sqrt{19}$$

(As was to be expected, the resultant values of c_{13}^* and c_{11}^* satisfy the first equation too.)

The new coordinates s_1 and s_2 (or s_{m-1} and s_m) associated with the eigenvalues λ_3 and λ_4 are found from the relations

$$s_1 = c_1 x,\ s_2 = c_2 x,\ c_1 = c_1^* + c_2^*,\ c_2 = j(c_1^* - c_2^*)$$

The vectors c_1^* and c_2^* are conjugate, therefore the coefficients in the equations for discontinuity surfaces

$$s_1 = -36x_1 - 5x_2 + 3x_3 + 2x_4$$

$$s_2 = -2\sqrt{19}\,x_1 - 3\sqrt{19}\,x_2 - \sqrt{19}\,x_3$$

are real. The coordinates x_3 and x_4 which are replaced by the new variables s_1 and s_2 are linear combinations of x_1, x_2, s_1, s_2:

$$x_3 = -\left(\frac{1}{\sqrt{19}}s_2 + 2x_1 + 3x_2\right)$$

$$x_4 = \frac{1}{2}s_1 + \frac{3}{2\sqrt{19}}s_2 + 21x_1 + 7x_2$$

To obtain the equations of motion with respect to the coordinates x_1, x_2, s_1, s_2 the quantities s_1 and s_2 should be differentiated by virtue of the original system and then the resultant equations should replace the last two equations and, finally, in all the four equations x_3 and x_4 expressed in terms of x_1, x_2, s_1 and s_2 should be replaced. These transformations result in

$$\left.\begin{aligned}
\dot{x}_1 &= x_2 \\
\dot{x}_2 &= -2x_1 - 3x_2 - \frac{1}{\sqrt{19}}s_2 \\
\dot{s}_1 &= \frac{3}{2}s_1 + \frac{\sqrt{19}}{2}s_2 + 73x_1 + 2u_1 + 3u_2 \\
\dot{s}_2 &= -\frac{\sqrt{19}}{2}s_1 + \frac{3}{2}s_2 - 15\sqrt{19}\,x_1 - \sqrt{19}\,u_2
\end{aligned}\right\}$$

It is easily seen that with $u = \Gamma (x^m)'$ (recall that Γ is a column vector with components -14 and -15 and $(x^m)' = x_1$) the equation system for s_1 and s_2 is independent of x_1 and x_2 and its eigenvalues are λ_3 and λ_4. In the resultant system, the matrix H' (or a two-dimensional column vector whose elements are the coefficients of x_1 which is equal to $(x^m)'$ in the equations for s_1 and s_2) is of the form

$$H' = \begin{vmatrix} 73 \\ -15\sqrt{19} \end{vmatrix}$$

and the matrix H'' (a two-dimensional column vector consisting of coefficients of x_2 equal to $(x^m)''$) is zero, as should follow from the design procedure. Let us select the components of the control vector as piecewise linear functions of x_1 with the coefficients having discontinuities on the planes $s_1 = 0$ and $s_2 = 0$:

$$u_1 = -\Psi_{11} x_1 - \delta_{01} \operatorname{sign} s_1$$

$$u_2 = \Psi_{21} x_1 + \delta_{02} \operatorname{sign} s_2 *$$

$$\Psi_{11} = \begin{cases} \alpha_{11} \text{ with } x_1 s_1 > 0 \\ \beta_{11} \text{ with } x_1 s_1 < 0 \end{cases} \qquad \Psi_{21} = \begin{cases} \alpha_{21} \text{ with } x_1 s_2 > 0 \\ \beta_{21} \text{ with } x_1 s_2 < 0 \end{cases}$$

The equation for s_2 includes only one component u_2 which has discontinuities on the plane $s_2 = 0$, therefore to find the sliding conditions, the inequalities (1.9) can be used in this scalar case. In the vicinity of the intersection $s_1 = 0$ and $s_2 = 0$, a sliding mode exists on the plane s_2 if

$$\alpha_{21} > -15 \text{ and } \beta_{21} < -15$$

To define the equations of motion in sliding mode along the plane $s_2 = 0$, the equation $\dot{s}_2 = 0$ should be used to find an equivalent control $u_{2\,\mathrm{eq}}$ and this should be substituted into the remaining equations. On the manifold $s_1 = 0$, $s_2 = 0$, we have $u_{2\,\mathrm{eq}} = -15\, x_1$ and therefore the equation for $\dot{s}_1$ is represented as

$$\dot{s}_1 = 28\, x_1 + 2u_1$$

* The need in a small relay component was rationalized in Sec. 1.

The condition (1.9) for this scalar case leads to a condition for a sliding mode to exist in any point of the plane $s_1 = 0$ lying on the intersection of $s_1 = 0$, $s_2 = 0$

$$\alpha_{11} > -14, \quad \beta_{11} < -14$$

Selecting, for instance $\alpha_{11} = 15$, $\beta_{11} = -15$, $\alpha_{21} = 20$, $\beta_{21} = -20$ we find that the conditions for the existence of a sliding mode over the entire intersection of both surfaces are met; in other words, this intersection is a sliding manifold.

As follows from the design procedure of the section, motion in sliding mode is determined by the eigenvalues $\lambda_1 = -1$ and $\lambda_2 = -2$ and, consequently, this motion is stable. This conclusion also can be arrived at if in the first two equations of the system of differential equations for x_1, x_2, s_1, s_2 the quantity s_2 is assumed zero (and this condition is valid in sliding mode). It also should be noted that the behaviour of the coordinates x_3 and x_4 also depends on the eigenvalues λ_1 and λ_2 because during a sliding mode (or with $s_1 = 0$, $s_2 = 0$) they are linear combinations of x_1 and x_2.

Note. In the design procedure it was assumed that after m steps the coordinates $x_{n-m+1}, \ldots, x_n$ can be replaced by new coordinates $s_1, \ldots, s_m$. But the coordinates $x_{n-m+1}, \ldots, x_n$ can be found impossible to eliminate. For instance, at each step the last coefficient in the appropriate eigenvector is equal to zero; then the coordinate x_n cannot be expressed in terms of any component of the vector s and of the non-eliminated components of the vector x. As already noted, however, at each step some coordinate or some two coordinates of the vector x can be replaced by new coordinates which are components of the vector s. If m steps have resulted in elimination not of $x_{n-m+1}, \ldots, x_n$ but of some other m coordinates from the set $x_{r+1}, \ldots, x_n$ [or those that are not the components of the vector $(x^m)'$], then this design method also is applicable; the coordinates $x_{r+1}, \ldots, x_n$ should be renumerated by assigning ordinal numbers from $n - m + 1$ through n to the eliminated coordinates and the conditions of sliding manifold existed earlier should be rearranged to suit the new numeration.

Let us now take up the case when new coordinates from the set $s_1, \ldots, s_m$ replace some components $x_1, \ldots, x_r$ of the vector $(x^m)'$. In such cases the eliminated coordinates, e.g. $x_{r-r'+1}, \ldots,$

x_r^* are linear combinations only of the components of the vector s and of the remaining components $x_1, \ldots, x_{r-r'}$ of the vector $(x^m)'$. Actually, if one of these combinations included at least one of the coordinates $x_{r+1}, \ldots, x_n$ then it would be expressed in terms of the components of the vectors s and x and eliminated instead of some of the coordinates $x_{r-r'+1}, \ldots, x_r$.

This implies that the linear control $u = \Gamma (x^m)'$ which was used to obtain the equations of discontinuity planes can be represented in the from

$$u = \Gamma_s s + \Gamma_r (x^r)'$$

where Γ_s and Γ_r are certain constant $m \times m$ and $m \times r - r'$ matrices; $(x^r)'$ is an $(r - r')$-dimensional vector with components $x_1, \ldots, x_{r-r'}$.

Let us write the equations of system motion similar to (9.17)

$$\left.\begin{aligned} \dot{x}^m &= \bar{A}_m x^m + \bar{A}_{xs} s + B' u \\ \dot{s} &= A_s s + H x^m + CBu \end{aligned}\right\} \qquad (9.17a)$$

The vector x^m in (9.17a) consists of $n - m$ components of the vector x including $x_1, \ldots, x_{r-r'}$; it does not include the coordinates $x_{r-r'+1}, \ldots, x_r$ and elements of all the matrices are computed by the same procedure as the elements in equations (9.17).

Since with $u = \Gamma (x^m)'$ or $u = \Gamma_s s + \Gamma_r (x^r)'$ the last equation in (9.17a) is identical with an equation for the vector s in (9.19)

$$A_s^* = A_s + CB\Gamma_s, \qquad Hx^m = - CB\Gamma_r (x^r)'$$

$$\dot{s} = A_s s + CB\,[u - \Gamma_r (x^r)']$$

Selecting the components of the vector u as a sum of the coordinates $x_1, \ldots, x_r$, with discontinuous coefficients, any of the techniques described in Sec. 1 can turn the manifold $s = 0$ into a sliding manifold. (The matrix $CB\Gamma_r$ serves as the matrix H' and the matrix H'' is zero.)

Now let us verify that motion in sliding mode along the manifold $s = 0$ is asymptotically stable. In the system u_{eq} computed with $s = 0$ and the linear control $u = \Gamma_s s + \Gamma_r \times$

* The components $x_1, \ldots, x_r$ of the vector $(x^m)'$ evidently can be enumerated so that the eliminated r' coordinates are the last ones.

$\times (x^r)'$ differ in the addend $\Gamma_s s$. Substituting these two linear controls into (9.17a) shows that the resultant linear systems have $n - m$ identical eigenvalues and m different eigenvalues which respectively are the eigenvalues of the matrices A_s and A_s^*. The control $u = \Gamma (x^m)'$ was selected such that the identical $n - m$ eigenvalues have negative real parts; therefore by virtue of the above theorem the motion along the manifold $s = 0$ is asymptotically stable.

Thus if in selecting discontinuity surfaces some of the coordinates represented in the control $\Gamma (x^m)'$ had to be eliminated in transforming the space x into the space (x^m, s), then for the conditions for the existence of a sliding manifold with stable motion the same coordinates can be eliminated from the control vector.

Only the case where $r' = r$ and the equation with respect to the vector s is of the form

$$\dot{s} = As + CBu$$

has not been treated. In this case the manifold $s = 0$ consists of phase trajectories of the original system alone if the control is assumed zero. By virtue of the uniqueness of the solution of such a linear system the describing point cannot reach the manifold $s = 0$ from any initial position. Nevertheless, the describing point can be made to reach the manifold and move along it by creating a sliding mode.

As follows from Sec. 1, the form of the control solving this problem depends on the dimensionality of the matrix H'. In our case $H' = 0$ and therefore the manifold $s = 0$ can become a sliding manifold provided that each component of the vector u is a piecewise linear function of at least one coordinate of the state vector.

Sec. 3. Stability in Systems with a Sliding Manifold

In studying the stability of motion for a system described by equation (9.1) let us assume that the intersection of discontinuity surfaces (III. III) is a sliding manifold and that motion in sliding mode is asymptotically stable. Then to ascertain stability under arbitrary initial conditions it is necessary to find the

conditions for the describing point to reach this manifold from any initial position.

Note first that if each control component in (9.1) is a sum of some coordinates with piecewise-constant coefficients then for this kind of system the necessary reaching conditions of Sec. 2, Ch. VI, can be used.

By these conditions, for each structure the eigenvectors associated with real positive eigenvalues should not stay in their existence domain. The proof of this assertion obtained for systems with scalar control is true for vector cases as well.

To obtain the sufficient reaching conditions let us take up the system motion in the space $s_1, \ldots, s_m$:

$$\dot{s} = CAx + CBu$$

If the first version of the diagonalization method is used, then in compliance with (9.3) this equation becomes

$$\dot{s} = CAx + Qu^* \tag{9.21}$$

Let us form the control u^* as a sum of all coordinates*

$$u^* = -\sum_{j=1}^{n} \Psi_{ij} x_j \tag{9.22}$$

$$\Psi_{ij} = \begin{cases} \alpha_{ij} & \text{with } x_j s_i > 0 \\ \beta_{ij} & \text{with } x_j s_i < 0 \end{cases} \quad (i = 1, \ldots, m, j = 1, \ldots, n)$$

Since the matrix Q is diagonal, (9.17) and (9.22) lead to conditions under which s_i and $\dot{s}_i$ have different signs over the entire space

$$\left.\begin{aligned} &q_i \alpha_{ij} > c_i a^j, \\ &q_i \alpha_{ij} < C_i a^j \end{aligned}\right\} \quad (i = 1, \ldots, m;\ j = 1, \ldots, n) \tag{9.23}$$

where c_i and a^j are columns and rows respectively of the matrices C and A. When the conditions (9.23) are met, the describing point either reaches each of the planes s_i and thus their intersection or goes to them asymptotically, which implies stability of the system.

---

* In this case, as in the case of the control (5.4) there is no need to introduce a relay component δ_u into the control.

The second version of the diagonalization method leads to the equations

$$\dot{s}^* = Rx + Qu \tag{9.24}$$

where R is an $m \times n$ matrix equal to $Q(CB)^{-1}CA$ with elements r_{ij}.

For reaching the control should be found in the system (9.24) such that conditions analogous with (9.22) and (9.23) hold:

$$u_i = -\sum_{i=1}^{n} \Psi_{ij} x_j \tag{9.25}$$

$$\Psi_{ij} = \begin{cases} \alpha_{ij} \text{ with } x_j s_i^* > 0 \\ \beta_{ij} \text{ with } x_j s_i < 0 \end{cases} \quad (i = 1, \ldots, m, \quad j = 1, \ldots, n)$$

$$\left.\begin{aligned} q_i \alpha_{ij} &> r_{ij} \\ q_i \beta_{ij} &< r_{ij} \end{aligned}\right\} \tag{9.26}$$

And, finally, make up a control in the form of (9.22) or (9.25) for systems in which the design problem is solved by using quadratic forms. For the first version of this method a new control is introduced and for the second version new discontinuity planes are introduced in conformity with linear transformations

$$u = (CB)^{-1} Du^*$$
$$s^* = D(CB)^{-1} s$$

where D is a symmetric matrix satisfying the Silvestre criterion. Write equations of motion in the subspace s for the first case where the control is selected in compliance with (9.22) and in the subspace s^* for the second case with the control (9.25)

$$\left.\begin{aligned} \dot{s} &= CAx - Du^0 - DU \operatorname{sign} s \\ \dot{s}^* &= D(CB)^{-1}CAx - Du^0 - DU \operatorname{sign} s^* \end{aligned}\right\} \tag{9.27}$$

where the components of the vector u^0 and the diagonal matrix U are given by the relations, analogous with (9.12)

$$u_i^0 = \sum_{j=1}^{n} \frac{\alpha_{ij} + \beta_{ij}}{2} x_j$$

$$U_i = \sum_{j=1}^{n} \frac{\alpha_{ij} - \beta_{ij}}{2} |x_j| \quad (i = 1, \ldots, m)$$

The derivatives of the positive definite function v equal to $\frac{1}{2}$ $s^T D^{-1} s$ in the first case and $\frac{1}{2} s^{*T} D^{-1} s^*$ in the second case are, by virtue of the associated system from (9.27), of the form

$$\dot{v} = s^T R' x - \sum_{i=1}^{m} \left(\sum_{j=1}^{n} \frac{\alpha_{ij} - \beta_{ij}}{2} \mid x_j \mid \right) \mid s_i \mid$$

$$\dot{v} = s^{*T} \bar{R}' x - \sum_{i=1}^{m} \left(\sum_{j=1}^{n} \frac{\alpha_{ij} - \beta_{ij}}{2} \mid x_j \mid \right) \mid s_i^* \mid$$

where R' and $\bar{R}'$ are $m \times n$ matrices, equal to $D^{-1}CA - U^0$ and $(CB)^{-1} \times CA - U^0$, respectively with elements r'_{ij} and $\bar{r}'_{ij}$; U^0 is an $m \times n$ matrix with elements $U^0_{ij} = \frac{\alpha_{ij} + \beta_{ij}}{2}$. The function $\dot{v}$ is evidently negative definite not only on the manifold $s = 0$ or $s^* = 0$ as was the case in systems with control (9.5) and (9.9) under the conditions (9.14) or (9.15) but also in the entire space $(x_1, \ldots, x_n)$ if

$$\left.\begin{array}{l} \dfrac{\alpha_{ij} - \beta_{ij}}{2} > \mid r'_{ij} \mid \\ \text{or} \\ \dfrac{\alpha_{ij} - \beta_{ij}}{2} > \mid \bar{r}'_{ij} \mid \\ (i = 1, \ldots, m, \quad j = 1, \ldots, n) \end{array}\right\} \qquad (9.28)$$

The conditions (9.28) are sufficient conditions for stability of motion in the subspace s or s^* and thus for reaching conditions.

Let us now take up the conditions under which a reaching occurs if the control components are piecewise linear functions of only r rather than all coordinates in compliance with (9.5) or (9.9). Let the intersection of discontinuity surfaces remain a sliding manifold, which implies that the conditions (9.6), (9.10), (9.14) or (9.15) hold depending on the design method. To check whether reaching occurs, turn to equation (9.17) which represents the system behaviour in the subspace s. The methods of Sec. 1 which insure the existence of a sliding manifold make use of two versions of linear transformations. The first version requires introduction of a new control u^* in compliance with some linear transformation $u = Ku^*$, in the second one

new discontinuity surfaces $s^* = \Omega s$ are introduced. Following these substitutions the equations of motion in the subspace s or s^* whose axes are distances to discontinuity planes are

$$\left.\begin{aligned} &\dot{s} = A_s s + Hx^m + CBKu^* \\ &\text{or} \\ &\dot{s}^* = \Omega A_s \Omega^{-1} s^* + \Omega Hx^m + \Omega CBu \end{aligned}\right\} \qquad (9.29)$$

The matrices of linear transformations K or Ω were selected such that the matrices of controls in equations (9.29) are diagonal or symmetric. They also must satisfy the Silvester criterion.

If the diagonalization method was used (i.e. the matrices CBK and ΩCB were diagonal), then with the conditions (9.6) or (9.10) fulfilled the quantities s_i and $\dot{s}_i$ (or s_i^* and $\dot{s}_i^*$) had opposite signs in the vicinity of the manifold $s = 0$ (or $s^* = 0$), in other words, $s = 0$ (or $s^* = 0$) was found to be a sliding manifold. Evidently in the case when the matrix A_s (or a similar one $A_s^* = \Omega A_s \Omega^{-1}$) is also diagonal and its elements are real and negative, the quantities s_i and $\dot{s}_i$ (or s_i^* and $\dot{s}_i^*$) have opposite signs in the entire subspace s (or s^*) and, consequently, for such matrices A_s (or A_s^*) reaching will occur.

When a design method is used whereby Lyapunov's function is made a quadratic form, the matrices K or Ω were selected such that the matrices CBK or ΩCB are equal to D, a certain symmetric matrix satisfying the Silvester criterion. As was shown in Sec. 1, under the conditions (9.14) or (9.15) the quadratic form $v = \frac{1}{2} s^T D^{-1} s$ $\left(\text{or } v = \frac{1}{2} s^{*T} D^{-1} s^*\right)$ and its time derivative have opposite signs in the vicinity of the manifold $s = 0$ (or $s^* = 0$), or it was a sliding manifold. It is easily seen that in the case where the matrix A_s (or A_s^*) is equal to $-D$ the function v and its time derivative have opposite signs in the entire subspace s (or s^*), or the motion in this subspace is stable "in large" and, consequently, for such matrices A_s (or A_s^*) reaching occurs.

The reaching conditions obtained here for the systems (9.1) with controls of the form (9.5), (9.9) which at first glance may seem to be too particular, can be used in the design of an asymptotically stable system. Section 2 described a control selection procedure for making $s = 0$ a sliding manifold. Let us make the constraints imposed on the matrix Γ stronger. Let us require

now that in the system (9.1) with $u = \Gamma (x^m)' m$ eigenvalues, other than $n - m$ eigenvalues which are chosen to suit the desired nature of motion in sliding mode, be distinct, real, and negative. With the fulfilment of the conditions for the existence of a sliding manifold these eigenvalues are eigenvalues of the matrix A_s in (9.17). Then design an asymptotically stable variable structure system using the diagonalization method in the following way. Replace simultaneously the discontinuity plane and the control vector, selected by the procedure of Sec. 2, by the linear transformations

$$s^* = \Omega s, \; u = Ku^*$$

where $\Omega^{-1} = T$; T is a matrix consisting of eigenvectors of the matrix A^*; $K = (CB)^{-1}TQ$; Q is an arbitrary diagonal matrix with elements $q_i (i = 1, \ldots, m)$. The matrix $T^{-1}A_sT$ is known to be equal in this case to Λ, a diagonal matrix with elements $\lambda_{n-m+1}, \ldots, \lambda_m$. Therefore, the equation of motion in the subspace s^* (analogous to (9.29)) is of the form

$$\dot{s}^* = \Lambda s^* + T^{-1}Hx^m + Qu^* \tag{9.30}$$

Select the components of the control vector u^* in compliance with (9.9), (9.10) bearing in mind that the matrix $\bar{H}$ in (9.8) and (9.10) is equal to $T^{-1}H$. Then the analysis of equation (9.30) with $s^* = 0$ which is analogous to equation (9.8) leads to the conclusion that the manifold $s^* = 0$ is a sliding manifold. Since in (9.30) the matrix Λ is diagonal and its elements are negative, according to the above reasoning reaching will occur in such a system.

Now let us take up the reaching problem in a system for which the existence of a sliding manifold was ascertained by using a quadratic form $\frac{1}{2} s^T Ds$. As before, we select the matrix D such that it is symmetric and satisfies the Silvester criterion, but require that eigenvalues of the matrix $-D$ be equal to $\lambda_{n-m+1}, \ldots, \lambda_m$. As in the diagonalization method, replace the discontinuity surfaces and the control vector by selecting a transformation matrix

$$\Omega = T_D T^{-1}, \; K = (CB)^{-1} TT_D^{-1} D$$

---

* Since the matrix A_s has real and distinct eigenvalues $\lambda_{n-m+1}, \ldots, \lambda_m$, then m linearly independent eigenvectors exist for it and the matrix T is nonsingular.

where T_D is a matrix consisting of eigenvectors of the matrix $-D$. From $\Lambda = T^{-1}A_sT$, $-T_D \Lambda T_D^{-1} = D^*$, it follows that $\Omega A_s \Omega^{-1} = -D$. This will result in an equation of motion in the subspace s^* analogous with (9.29)

$$\dot{s}^* = -Ds^* + T_D T^{-1} Hx^m + Du^* \tag{9.30a}$$

Select the components of the vector u^* in accordance with (9.9), (9.15) with the proviso that the matrix $\overline{H}^*$ is equal to $D^{-1} T_D T^{-1} H' - U_0$ (or $T_D \Lambda T^{-1} H' - U_0$). In this case, as follows from Sec. 1, the manifold $s^* = 0$ is a sliding manifold. As the matrix of the vector s^* is equal to $-D$, in this system the manifold $s^* = 0$ is reached under arbitrary initial conditions.

It is important that in the above cases the reaching conditions are also the conditions for a sliding manifold to exist. Since by virtue of an earlier assumption motion in sliding mode is asymptotically stable, reaching conditions insure asymptotic stability of the system motion under arbitrary initial conditions.

In conclusion of this section, it would be appropriate to note the specifics of designing a system with stable motion along the sliding manifold where the reaching conditions are met. To obtain a system with such properties it is necessary first to find a certain linear control $u = \Gamma (x^m)'$ which insures stability of the system, or that the conditions $\operatorname{Re} \lambda_i < 0$ $(i = 1, \ldots, n)$ are met. If, however, the eigenvalues $\lambda_1, \ldots, \lambda_{n-m}$ are significant for motion in sliding mode, as they completely define motion, then the motion up to the time when a sliding mode starts on the manifold $s = 0$ does not depend on the eigenvalues $\lambda_{n-m+1}, \ldots, \lambda_n$ alone.

As follows from equations (9.30) and (9.30a) the velocities of the coordinates s_i in the diagonalization method and of the function v when the system behaviour is studied with the use of quadratic forms depend not only on the eigenvalues $\lambda_{n-m+1}, \ldots, \lambda_n$ but also on the components of the control vector. Therefore with any values of these eigenvalues provided only that they are negative, the reaching time can be reduced if the magnitude of the control is increased.

Note. The above method for design of an asymptotically stable system requires finding a linear control $u = \Gamma (x^m)'$ such

---

* This relation may be used to select the matrix D if an arbitrary unitary matrix T_D is assumed.

that the system has m distinct real and negative eigenvalues while $n - m$ eigenvalues are selected to obtain the desired quality of motion in sliding mode. With a certain r smaller than or equal to $n - m$, this motion may be given the desired properties. (As follows from the conditions of existence of a sliding manifold, with r increasing the number of equality constraints on coefficients of the matrix C defining this motion is reduced and with $r = n - m$ this matrix can be selected arbitrarily.)

It may be found, however, that a linear control $u = \Gamma(x^m)'$ cannot make the remaining m eigenvalues real and negative with any $r \leqslant n - m$. In such cases a linear control for which this condition holds is selected as $u = \Gamma x^l$ if x^l is a vector with components $x_1, \ldots, x_l$ and the number l may be either smaller or larger than $n - m$ (but certainly smaller than n). Since with $u = \Gamma x^l$ the latter equation in (9.17) is equivalent to one for the vector s in (9.19), it can be rearranged

$$\dot{s} = A_s^* s + CB(u - \Gamma x^l)$$

Selecting the components of the vector u as a sum of the coordinates $x_1, \ldots, x_l$ with discontinuous coefficients, any technique of Sec. 1 can make the manifold $s = 0$ found by the procedure of Sec. 2 a sliding manifold with asymptotically stable motion. (The matrix $CB\Gamma$ acts as the matrix H' and the matrix H'' is zero.) Because the linear control $u = \Gamma x^l$ is selected such that the eigenvalues of the matrix A_s^* are real and negative, the methods of this Section insure reaching and thus asymptotic stability of the system under arbitrary initial conditions.

Sec. 4. The Control Hierarchy Method

The control hierarchy method of Ch. III and Ch. IV required selection of control components in such a way that a sliding mode starts at the intersection $s_i = 0$ $(i = 1, \ldots, k,\ 1 \leqslant k \leqslant m)$ at any values of the components $u_{k+1}, \ldots, u_m$. If this condition is valid for any k $(1 \leqslant k \leqslant m)$, then the manifold $s = 0$ is a sliding manifold. For systems with vector control such a situation arises when the relations (3.30) hold; the sequence for the design of a control is described in Sec. 5, Ch. IV. What is important is that this method requires successive treatment of scalar problems but, unlike diagonalization methods, a

sliding mode does not necessarily exist at each individual discontinuity plane.

Let us make use of the procedure of the control hierarchy method proposed in Part I for the design of a system intended to control a linear time-invariant plant (9.1). Equations for sliding along the intersection of the planes $s_i = 0$ ($i = 1, \ldots, k$; $1 \leqslant k \leqslant m$), similar to (3.27), can be obtained by using the succession which resulted in equations of sliding along the intersection of all discontinuity surfaces (III.IV). For this purpose the system $\dot{s}_i = 0$, $s_i = 0$ ($i = 1, \ldots, k$) should be solved for u_i ($i = 1, \ldots, k$), $x_{n-k+1}, \ldots, x_n$, the result should be substituted into the first $n - k$ equations of the system (9.1) and the remaining k equations eliminated*. This leads to a system of equations

$$\dot{x}^k = A_k x^k + B_k u^k \tag{9.31}$$

where x^k and u^k are $(n - k)$ and $(m - k)$-dimensional column vectors with elements $(x_1, \ldots, x_{n-k})$ and $(u_{k+1}, \ldots, u_m)$ respectively,

$$A_k = A'_k - A'_{n-k}(C''_k)^{-1} C'_k - B'_k(C'_k B'_k + C''_k B''_k)^{-1} [C'_k(A'_k - A'_{n-k}(C''_k)^{-1} C''_k) + C''_k(A''_k - A''_{n-k}(C''_k)^{-1} C'_k)]$$

$$B_k = B'_{m-k} - B'_k(C'_k B'_k + C''_k B''_k)^{-1}(C'_k B'_{m-k} + C''_k B''_{m-k})$$

$$A = \begin{array}{c} n-k \left\{ \right. \\ \\ k \left\{ \right. \end{array} \left\| \begin{array}{c:c} A'_k & A'_{n-k} \\ \cdots\cdots & \cdots\cdots \\ \underbrace{A''_k}_{n-k} & \underbrace{A''_{n-k}}_{k} \end{array} \right\|$$

$$B = \begin{array}{c} n-k \left\{ \right. \\ \\ k \left\{ \right. \end{array} \left\| \begin{array}{c:c} B'_k & B'_{m-k} \\ \cdots\cdots & \cdots\cdots \\ \underbrace{B''_k}_{k} & \underbrace{B''_{m-k}}_{m-k} \end{array} \right\|$$

$$C^k = \left\| \begin{array}{c:c} \underbrace{C'_k}_{n-k} & \underbrace{C''_k}_{k} \end{array} \right\|$$

* To perform these operations the components of the vectors u and s should be renumerated in compliance with the rule of Sec. 5, Ch. IV.

C^k is a $k \times n$ matrix with rows c_i $(i = 1, \ldots, k)$.

If $k = m$, then $B'_k = B'$, $B'_{m-k} = 0$, $B''_k = 0$, $B''_{m-k} = 0$, $C'_k = C'$, $C''_k = C''$ and the system (9.31) coincides with the system (III.IV) with $F \equiv 0$.

Select each control component as a sum of r_i components of the vector $(x_1, \ldots, x_n)$ with discontinuous coefficients such that $r_i \geqslant r_j$ with $i < j$ and $r_i \leqslant n - i$:

$$u_i = -\sum_{j=1}^{r_i} \Psi_{ij} x_j - \delta_{ui} \quad (i = 1, \ldots, m) \tag{9.32}$$

where

$$\Psi_{ij} = \begin{cases} \alpha_{ij} \text{ with } x_j s_i > 0 \\ \beta_{ij} \text{ with } x_j s_i < 0 \end{cases} \qquad \delta_{ui} = \begin{cases} \delta_{0i} \text{ with } s_i > 0 \\ -\delta_{0i} \text{ with } s_i < 0 \end{cases}$$

α_{ij}, β_{ij}, δ_{0i} are constant.

Assume that at the intersection $s_i = 0$ $(i = 1, \ldots, k; 1 \leqslant k < m)$ a sliding mode has started which is described by equations (9.31). Let us find under what conditions a sliding mode arises at the intersection $s_i = 0$ $(i = 1, \ldots, k)$ if the motion in sliding mode along the manifold $s_i = 0$ $(i = 1, \ldots, k)$ makes the describing point reach the plane $s_{k+1} = 0$. Finding these conditions is a scalar problem which is reduced to meeting the conditions (1.9) for the system (9.31) on the plane $s_{k+1} = 0$. The equation for the plane $s_{k+1} = 0$ on the manifold $s_i = 0$ $(1 \leqslant i \leqslant k)$ along which the system (9.31) acts is of the form

$$s_{k+1} = c^k_{k+1} x^h = 0 \tag{9.33}$$

where c^k_{k+1} is a row vector with elements $c^k_{k+1,i}$ $(i = 1, \ldots, n - k)$ found from the relations

$$c^k_{k+1} = c'_{k+1} (C'_k)^{-1} C'_k$$

$c_{k+1} = (\underbrace{c'_{k+1}}_{n-k}, \underbrace{c''_{k+1}}_{k})$, c_{k+1} is the $(k+1)$-th row of matrix C.

To find the condition for a sliding mode to start on the plane $s_{k+1} = 0$ let us find the function $\dot{s}_{k+1}$ for the system (9.31)

with control (9.32). In computing $\dot{s}_{k+1}$ let us assume that $c^k_{k+1,\,n-k} \neq 0$ and bear in mind the conditions $s_{k+1} = 0$ or

$$x_{n-k} = -\frac{1}{c^k_{k+1,\,n-k}} \sum_{i=1}^{n-k-1} c^k_{k+1,\,i}\, x_i \quad \text{and} \quad r_{k+1} \leqslant n-k-1:$$

$$\dot{s}_{k+1} = \sum_{j=r_{k+1}+1}^{n-k-1} \left[c^k_{k+1}\, a^j_k - (c^k_{k+1}\, a^{n-k}_k) \frac{c^k_{k+1,\,j}}{c^k_{k+1,\,n-k}} \right] x_j +$$

$$+ \sum_{j=1}^{r_{k+1}} \left[c^k_{k+1}\, a^j_k - (c^k_{k+1}\, a^{n-k}_k) \frac{c^k_{k+1,\,j}}{c^k_{k+1,\,n-k}} - \right.$$

$$\left. - (c^k_{k+1}\, b^{k+1}_k)\, \Psi_{k+1,\,j} - \sum_{i=k+2}^{m} (c^k_{k+1}\, b^i_k)\, \Psi_{ij} \right] x_j -$$

$$- \left(c^k_{k+1}\, b^{k+1}_k \delta_{u,\,k+1} + \sum_{i=k+2}^{m} c^k_{k+1}\, b^i_k\, \delta_{ui} \right) \tag{9.34}$$

where a^j_k $(j = 1, \ldots, n-k)$ and b^i_k $(i = k+1, \ldots, m)$ are columns of $n-k \times 1$ matrices A_k and B_k. By virtue of the condition $r_i \geqslant r_j$ with $i < j$ some of the coefficients Ψ_{ij} $(i = k+2, \ldots, m)$ can be equal to zero. Using the reasoning that whereby conditions for the existence of a sliding plane were obtained from equation (5.7), one can find the conditions conducive for the existence of a sliding mode on any point of the plane (9.33) from equation (9.34)

$$\frac{c^k_{k+1}\, a^j_k}{c^k_{k+1,\,j}} = \frac{c^k_{k+1}\, a^{n-k}_k}{c^k_{k+1,\,n-k}}$$

$$(j = r_{k+1}+1, \ldots, n-k-1) \tag{9.35}$$

$$\left.\begin{aligned} &(c^k_{k+1}\, b^{k+1}_k)\, \alpha_{k+1,\,j} \geqslant c^k_{k+1}\, a^j_k - (c^k_{k+1}\, a^{n-k}_k) \frac{c^k_{k+1,\,j}}{c^k_{k+1,\,n-k}} - \\ &- \min_{\Psi_{ij}} \sum_{i=\kappa+2}^{m} (c^k_{k+1}\, b^i_k)\, \Psi_{ij} \\ &(c^k_{k+1}\, b^{k+1}_k)\, \beta_{k+1,\,j} \leqslant c^k_{k+1}\, a^j_k - (c^k_{k+1}\, a^{n-k}_k) \frac{c^k_{k+1,\,j}}{c^k_{k+1,\,n-k}} - \\ &- \max_{\Psi_{ij}} \sum_{i=k+2}^{m} (c^k_{k+1}\, b^i_k)\, \Psi_{ij} \quad (j = 1, \ldots, r_{k+1}) \end{aligned}\right\} \tag{9.36}$$

$$(c_{k+1}^k b_k^{k+1}) \delta_{0,k+1} > \sum_{i=k+2}^{m} | (c_{k+1}^k b_k^i) \delta_{0i} | \qquad (9.37)$$

Under the resultant conditions for existence of a sliding plane the conditions (9.36) and (9.37) lead to a control hierarchy mentioned in Part I and represented in the conditions (3.30). As was done in scalar cases, δ_{0i} can be made as small as desired provided that the conditions (9.37) are observed.

If the conditions (9.35)-(9.37) are met for any $k(0 \leqslant k<m)$* any of the intersection manifolds $s_i = 0 (i = 1, \ldots, k;\ 1 \leqslant k \leqslant m)$ is a sliding manifold. These conditions with $r_i < n - i$ are constraints on the selection of coefficients of equations for discontinuity surfaces. Stability of motion along the sliding manifold in the presence of these constraints is ascertained by using the theorem of Sec. 2 of this chapter. The coefficients α_{ij}, β_{ij} should be selected starting from $k = m - 1$ with which discontinuous coefficients are not represented in the inequalities (9.36) and the right-hand side of the inequality (9.37) is zero. Then from (9.35)-(9.37) with $k = m - 2$ the values of $\alpha_{m-1,j}$, $\beta_{m-1,j}$ are found with due regard for the selected values of α_{mj}, β_{mj} etc. up to the coefficients α_{1j}, β_{1j} associated with $k = 0$.

And finally, as to reaching conditions at each step, a scalar case is treated, therefore the sufficient conditions (6.8) of Sec. 3, Ch. VI, may be used. Let each of the manifolds $s_i = 0$ $(i = 1, \ldots, k;\ 1 \leqslant k \leqslant m)$ be a sliding manifold and on one of the sliding manifolds, $s_i = 0$ $(i = 1, \ldots, k)$, a motion in sliding mode starts which is described by equations (9.31). Then with conditions for sliding (9.33) holding over the entire plane $s_{k+1} = 0$, the describing point is certain to reach this plane, by virtue of (6.8) if

$$\frac{c_{k+1}^k a_k^{n-k}}{c_{k+1,\,n-k}^k} \leqslant 0 \qquad (9.38)$$

It is evident that with the inequality (9.38) holding for all k $(0 \leqslant k < m)$, the describing point will reach the plane $s_1 = 0$ from any initial position and then moving along it in sliding mode it reaches the intersections $s_1 = 0$ and $s_2 = 0$ and in m

---

* With $k = 0$ all indices in equation (9.31) should be eliminated and $c_1^0 = c_1$.

steps it will be in the manifold $s = 0$. If the motion along this manifold is asymptotically stable, then the inequalities (9.38) for $0 \leqslant k < m$ are sufficient conditions for the system (9.1) with an asymptotically stable control (9.32).

Sec. 5. Control of Time-Varying Plants

Let us suppose that the plant is time-varying, or that elements of the matrices A and B in (9.1) are functions of time. The control problem is solved under the condition that the plant parameters cannot be measured and only their ranges are known

$$\left.\begin{array}{l} a_{ij\,\min} \leqslant a_{ij}(t) \leqslant a_{ij\,\max} \\ (i, j = 1, \ldots, n;\ a_{ij\,\min},\ a_{ij\,\max} = \text{const}), \\ b_{ij\,\min} \leqslant b_{ij}(t) \leqslant b_{ij\,\max} \\ (i = 1, \ldots, n;\ j = 1, \ldots, m;\ b_{ij\,\min},\ b_{ij\,\max} = \text{const}) \end{array}\right\} \tag{9.39}$$

The design methods described in Sec. 1 of this chapter cannot be used to solve this problem because they require data on the coefficients of the matrix CB and the parameters b_{ij} cannot be measured. Let us show that if only the signs of the products $c_{k+1}^{k}\, b_{k}^{k+1}$ $(0 \leqslant k < m)$ are known and the conditions

$$\inf_{t} \left| c_{k+1}^{k}\, b_{k}^{k+1} \right| \neq 0 \tag{9.40}$$

hold, then control with sliding modes can be obtained by using the control hierarchy method. Select the control in the form

$$u_i = -\sum_{j=1}^{n-i} \Psi_{ij}\, x_j \quad (i = 1, \ldots, m) \tag{9.41}$$

where

$$\Psi_{ij} = \begin{cases} \alpha_{ij} & \text{with } x_j s_i > 0 \\ \beta_{ij} & \text{with } x_j s_i < 0 \end{cases}$$

(Unlike (9.32) in this control $r_i = n - i$). For the control (9.41) the conditions (9.35) will vanish with the parameters of the matrix A unknown. The inequalities (9.36) can always be

made to hold, provided that the conditions (9.39) and (9.40) hold, by properly selecting the coefficients α_{ij} and β_{ij}:

$$\left.\begin{aligned}
&\operatorname{sign}\left(c_{k+1}^{k} b_{k}^{k+1}\right) \alpha_{k+1, j} > \max_{\Psi_{ij}} \sup_{t} \frac{1}{\left|c_{k+1}^{k} b_{k}^{k+1}\right|}\left[c_{k+1}^{k} a_{k}^{j} - \right. \\
&\left. - \left(c_{k+1}^{k} a_{k}^{n-k}\right) \frac{c_{k+1, j}^{k}}{c_{k+1, n-k}^{k}} - \sum_{i=k+2}^{m}\left(c_{k+1}^{k} b_{k}^{i}\right) \Psi_{ij}\right] \\
&\operatorname{sign}\left(c_{k+1}^{k} b_{k}^{k+1}\right) \beta_{k+1, j} < \min_{\Psi_{ij}} \inf_{t} \frac{1}{\left|c_{k+1}^{k} b_{k}^{k+1}\right|}\left[c_{k+1}^{k} a_{k}^{j} - \right. \\
&\left. - \left(c_{k+1}^{k} a_{k}^{n-k}\right) \frac{c_{k+1, j}^{k}}{c_{k+1, n-k}^{k}} - \sum_{i=k+2}^{m}\left(c_{k+1}^{k} b_{k}^{i}\right) \Psi_{ij}\right]
\end{aligned}\right\} \quad (9.42)$$

In Part II it was shown that if the control consists of the sum of activities along all coordinates except one, then with the fulfilment of the conditions of reaching the relay component in the control may be discarded, but the conditions for the existence of a sliding plane must have the shape of a strict inequality. Now we write reaching conditions for the system and assume that they are observed. This is the reason why the control (9.41) does not have the addend δ_{ui} and therefore the conditions (9.36) and (9.35) should be replaced by the conditions (9.42). To ascertain reaching, the scalar reaching conditions obtained in Part II for the scalar case can be used. These conditions (7.5) for the system are of the form

$$\sup_{t} \frac{c_{k+1}^{k} a_{k}^{n-k}}{c_{k+1, n-k}^{k}} < 0 \quad (0 \leqslant k < m) \qquad (9.43)$$

Consequently, in the system (9.1) with time-varying parameters and a control (9.41) a motion in sliding mode described $(n-m)$-th order differential equations (III. IV) starts and does not cease with $F(t) \equiv 0$ provided that the relations (9.42) and (9.43) hold. It is important that the existence conditions on the sliding manifold (9.42) can be made true with any values of the coefficients of the matrix C; it is these coefficients that this motion depends on.

Chapter X

CONTROL OF FORCED MOTION

Sec. 1. Combined Systems

Let us start studying the design of systems which are intended for the control of forced motion of plants described by equation (III. I) with the case when external signals (disturbances or setpoints) can be measured. Assuming that discontinuous controls (III. II) can result in motion in sliding mode with desired properties, along the intersection of discontinuity surfaces, let us try to make this intersection a sliding manifold and make certain that any phase trajectory of the system reaches it. For this purpose let us use the principle of combined control which implies the use of both the system coordinates and measured external signals as components of the control.

Then let us perform the design by the control hierarchy method. The equation of motion along the intersection of the planes $s_i = 0$ $(i = 1, \ldots, k;\ 0 \leqslant k < m)$* needed for selection of the control parameters is different from (9.31) in that the right-hand side includes the vector of the external disturbances

$$\dot{x}^k = A_k x^k + D_k F + B_k u^k \tag{10.1}$$

where x^k, A_k, B_k and u^k are found in compliance with (9.31) and the matrix D_k is found from the relation

$$D_k = D_k' - B_k' (C_k' B_k' + C_k'' B_k'')^{-1} (C_k' D_k' + C_k'' D_k'')$$

$$D = \begin{Vmatrix} D_k' \\ \cdots \\ D_k'' \end{Vmatrix} \begin{matrix} \} n - k \\ \\ \} k \end{matrix}$$

* With $k = 0$ this equation is equivalent to the original equation (III. I).

Assuming that the plant parameters are constant compose a control

$$u_i = u_i^x + u_i^F \tag{10.2}$$

where u_i^x is equal to u_i in (9.32)

$$u_i^F = -\sum_{j=1}^{l} \Psi_{ij}^f f_j \qquad (i = 1, \ldots, m)$$

$$\Psi_{ij}^f = \begin{cases} \alpha_{ij}^f & \text{with } f_j s_i > 0 \\ \beta_{ij}^f & \text{with } f_j s_i < 0 \end{cases}$$

Following the reasoning of Sec. 4, Ch. IX, for free motion, find the condition for a sliding mode to exist in the system (10.1) with control (10.2) for any point of the plane $s_{k+1} = 0$ defined by the relation (9.33). Compute $\dot{s}_{k+1}$ for this case

$$\dot{s}_{k+1} = s_{k+1}^x + \sum_{j=1}^{l} \left| c_{k+1}^k d_k^j - c_{k+1}^k b_{k+1}^k \Psi_{k+1}^f - \right.$$

$$\left. - \sum_{i=k+2}^{m} (c_{k+1}^k b_k^i) \Psi_{ij}^f \right| f_j \tag{10.3}$$

where s_{k+1}^x is the same as the right-hand side of equation (9.34) and d_k^j $(j = 1, \ldots, l)$ are columns of the matrix D_k.

Equation (9.34) led to the relations (9.35)-(9.37) which insured the condition (1.9) for a sliding mode existence on the surface $s_{k+1} = 0$ in the space $x_1, \ldots, x_{n-k}$ for the case of a free motion. According to (9.34) and (10.3) this condition holds for forced motion also if, firstly, the relations (9.35)-(9.37) hold and secondly the following conditions are fulfilled

$$\left.\begin{aligned} &(c_{k+1}^k b_k^{k+1})\, \alpha_{k+1,j}^f \geqslant c_{k+1}^k d_k^j - \min_{\Psi^f} \sum_{i=k+2}^{m} (c_{k+1}^k b_k^i)\, \Psi_{ij}^f \\ &(c_{k+1}^k b_k^{k+1})\, \beta_{k+1,j}^f \leqslant c_{k+1}^k d_k^j - \\ &- \max_{\Psi_{ij}^f} \sum_{i=k+2}^{m} (c_{k+1}^k b_k^i)\, \Psi_{ij}^f \quad (j = 1, \ldots, l) \end{aligned}\right| \tag{10.4}$$

When the conditions (9.35)-(9.37) and (10.4) hold for all k $(0 \leqslant k < m)$ any of the manifolds $s_i = 0$ $(i = 1, \ldots, k;$

$1 \leqslant k \leqslant m$) is a sliding manifold; this applies to the manifold of intersection of all discontinuity surfaces $s = 0$.

In analogy with combined systems with scalar control Sec. 1, Ch. VIII, in this vector case the inequalities (9.38) for free motion also are reaching conditions for forced motion.

In the case when the plant parameters vary in time the component u^x_i in the control (10.2) should be selected in compliance with (9.41), (9.42) and the conditions (10.4) should be rearranged for time-varying parameters

$$\left.\begin{aligned}
&\operatorname{sign}\left(c^k_{k+1}\, b^{k+1}_k\right) \alpha^f_{k+1,\,j} \geqslant \max_{\Psi^f_{ij}} \sup_t \left| c^k_{k+1}\, b^{k+1}_k \right|^{-1} \times \\
&\times \left[c^k_{k+1}\, d^j_k - \sum_{i=k+2}^{m} \left(c^k_{k+1}\, b^i_k\right) \Psi^f_{ij} \right] \\
&\operatorname{sing}\left(c^k_{k+1}\, b^{k+1}_k\right) \beta^l_{k+1,\,j} \leqslant \min_{\Psi^f_{ij}} \inf_t \left| c^k_{k+1}\, b^{k+1}_k \right|^{-1} \times \\
&\times \left[c^k_{k+1}\, d^j_k - \sum_{i=k+2}^{m} \left(c^k_{k+1} b^i_k\right) \Psi^f_{ij} \right] (j = 1, \ldots, l)
\end{aligned}\right\} \qquad (10.5)$$

The conditions (10.5) with (9.42) for all k ($0 \leqslant k < m$) insure the existence of a sliding manifold which coincides with the intersection of all discontinuity surfaces. The inequality (9.43) for this system remains the condition for successive reaching manifolds of the $(n - 1)$-st, $(s_1 = 0)$, $(n - 2)$-nd $(s_1 = 0,\ s_2 = 0)$, etc. through the $(n - m)$-th order $(s = 0)$ by the describing point.

Sec. 2. Systems without Measurement of External Signals

Now let us take up systems in which forced motion is controlled without direct measurement of external signals. The concept of solving such problems was discussed in Ch. VIII for systems with scalar control. In such systems the desired motion cannot be obtained through sliding modes by using only error signals; it is necessary to find such a coordinate which, firstly, would reject disturbances and, secondly, would give data on the magnitude of such disturbances. In control systems this coor-

dinate usually is the output of the servomechanism. Section 3 of Ch. VIII has specified the kind of differential equation for which such a coordinate is indeed found in the system. Let us now show that a similar approach can be used in the vector case if the system motion is described by equations of the form

$$\dot{x}^* = A^* x^* + D^* F + B^* u \tag{10.6}$$

where x^* is an n-dimensional state vector with elements $(x_1, \ldots, x_m, y_1, \ldots, y_m, x_{2m+1}, \ldots, x_n)$; u and F are the n-dimensional and l-dimensional vectors of the control and external signals; A^*, D^*, B^* are constant or variable matrices with elements a^*_{ij} $(i, j = 1, \ldots, n)$, d^*_{ij} $(i = 1, \ldots, n;\ j = 1, \ldots, l)$, b^*_{ij} $(i = 1, \ldots, n;\ j = 1, \ldots, m)$. The specific feature of the system (10.6) is that there are m coordinates, e.g. $x_1, \ldots, x_m$ whose equations do not include components u_i of the vector u, or

$$b^*_{ij} = 0 \quad (i, j = 1, \ldots, m) \tag{10.7}$$

Let us now insure in such a system the existence of a sliding manifold of the $(n - m)$-th order without direct measurement of the external signals $f_1, \ldots, f_l$ which are the components of the vector F. Replace the coordinates $y_1, \ldots, y_m$ which are the components of the vector y by new variables

$$x_{m+i} = \sum_{j=1}^{m} a^*_{ij} x_j + \sum_{j=1}^{m} a^*_{i,\,m+j}\, y_j + \\ + \sum_{j=1}^{n-2m} a^*_{2m+j}\, x_{2m+j} + \\ + \sum_{j=1}^{m} d^*_{ij} f_j \quad (i = 1, \ldots, m) \tag{10.8}$$

and then study the system behaviour in the state space of the vector x with components $x_1, \ldots, x_n$*. Assume that by proper

* For the system (10.6) the condition $2m \leqslant n$ always holds because otherwise the rank of the matrix B is smaller than m and this is a singular case in which the columns of the B matrix are linearly dependent and the control dimensionality can be reduced.

selection of coefficients for the matrix C, the motion in sliding mode along the intersection of the surfaces (III.III) in the space $x_1, \ldots, x_n$ has the desired properties and let us try to make this manifold a sliding manifold. For this purpose arrange the components of the vector u as a sum of the coordinates of the state vector x and of the vector y which, as in the scalar case characterizes the external signals

$$u = u^x + u^y \tag{10.9}$$

where $u^y = \Psi^y y$, Ψ^y is a matrix with elements

$$\Psi^y_{ij} = \begin{cases} \alpha^y_{ij} \text{ with } & s_i y_j > 0 \\ \beta^y_{ij} \text{ with } & s_i y_j < 0, \ \alpha_{ij}, \ \beta_{ij} = \text{const} \ (i,j = 1, \ldots, m) \end{cases} \tag{10.10}$$

and the vector u^x is obtained from (9.41) because this control law is necessary in the case of varying system parameters.

Now let us write the equations for system motion in the space $x_1, \ldots, x_n$. First, solve the system of equations (10.8) for the coordinates $y_i (i = 1, \ldots, m)$ eliminated from the state vector assuming that $\det \| a^*_{i, m+j} \|$ $(i, j = 1, \ldots, m)$ is not equal to zero

$$y = Hx + D^y F \tag{10.11}$$

where H and D_y are $m \times n$ and $m \times l$ matrices depending on the coefficients of the original system. Rearrange the function u^y into

$$u^y = -\theta(t) y - [\Psi^y - \theta(t)] y \tag{10.12}$$

where $\theta(t)$ is a matrix whose elements are functions $\theta_{ij}(t)$ $(i, j = 1, \ldots, m)$; their selection will be treated below. To obtain motion equations for $x_1, \ldots, x_n$ the first m equations of the original system should be replaced by the equations $\dot{x}_i = x_{m+i}$ $(i = 1, \ldots, m)$, the equations for $y_1, \ldots, y_m$, by equations resulting from differentiation of system (10.8) along the trajectories of the initial system and, finally, the components of the vector y should be replaced everywhere except the last addend in (10.12), by their values from (10.11). This procedure is realizable for systems of the form (10.6), (10.7). With the condition

(10.7) violated, the right-hand sides of equations (10.8) would be nondifferentiable functions. This leads to a system

$$\dot{x} = Ax + Bu^x - B(\Psi^y - \theta)y - B\theta D^y F + DF + \overline{D}\dot{F} \quad (10.13)$$

where elements of the matrices, A, B, D and $\overline{D}$ depend on the coefficients of the original system, the matrix θ, and on the derivatives of coefficients of equation (10.8). Let us consider all parameters in the system (10.13) as bounded time functions*.

Proceeding then by the control hierarchy method select the parameters of control such that the intersection of discontinuity surfaces (III.III) will be a sliding manifold. Compute $\dot{s}_{k+1}$ under the assumption that on the intersection $s_i = 0$ $(i = 1, \ldots, k;\ 0 \leqslant k < m)$ a sliding mode has started which is described by the equations

$$\dot{x}^k = A_k x^k + B_k u^{xk} - B_k(\Psi_k^y - \theta_k)\, y - B_k\, \theta_k\, D^y F + \\ + D_k F + \overline{D}_k \dot{F} \quad (10.14)$$

where x^k, A_k, B_k, u^{xk}, D_k are found from (9.31) and (9.34); Ψ_k^y and θ_k are $(m - k) \times m$ matrices with elements Ψ_{ij}^y and θ_{ij} $(i = k + 1, \ldots, m;\ j = 1, \ldots, m)$; the matrix $\overline{D}_k$ is found from a relation, similar to (9.44)

$$\overline{D}_k = \overline{D}_k' - B_k'(C_k' B_k' + C_k'' B_k'')^{-1}(C_k' \overline{D}_k' + C_k'' \overline{D}_k'')$$

$$\overline{D} = \begin{Vmatrix} \overline{D}_k' \\ \cdots\cdots \\ \overline{D}_k'' \end{Vmatrix} \begin{matrix} \} n - k \\ \\ \} k \end{matrix}$$

By virtue of the system (10.14) $\dot{s}_{k+1}$ is of the form

$$\dot{s}_{k+1} = \dot{s}_{k+1}^{(x)} + \dot{s}_{k+1}^{y} + \dot{s}_{k+1}^{F} \quad (10.15)$$

---

* In this way the class of systems to be discussed is limited; in agreement with this constraint the coefficients and their derivatives in the system (10.6) should be bounded functions. Note also that for the coefficients in the solution (10.11) of the system (10.8) to be constrained the condition

$$\inf_t \left| \left(\det \| a_{i,\, m+j}^* \| \right) \right| \neq 0 \quad (i, j = 1, \ldots, m)$$

should hold.

where $\dot{s}^x_{k+1}$ is equal to the right-hand side of (9.34) with $r_k = n - k - 1$ and $\delta_{ui} = 0$ $(i = k+1, \ldots, m)$

$$\dot{s}^y_{k+1} = -\sum_{j=1}^{m} \left[(c^k_{k+1} b^{k+1}_k)(\Psi^y_{k+1,j} - \theta_{k+1,j}) + \right.$$

$$\left. + \sum_{i=2}^{m-k} (c^k_{k+1} b^{k+i}_k)(\Psi^y_{k+i,j} - \theta_{k+i,j}) \right] y_i$$

$$\dot{s}^F_{k+1} = -\sum_{j=1}^{m} \left\{ \left[c^k_{k+1} b^{k+1}_k) \theta_{k+1,j} + \sum_{i=2}^{m-k} (c^k_{k+1} b^{k+i}_k) \theta_{k+i,j} \right] \times \right.$$

$$\left. \times \left(\sum_{q=1}^{l} d^y_{iq} f_q \right) \right\} - \sum_{j=1}^{l} c^k_{k+1} d^j_k f_j - \sum_{j=1}^{l} c^k_{k+1} \bar{d}^j_k \dot{f}_j$$

d^j_k and $\bar{d}^j_k$ $(j = 1, \ldots, l)$ are columns of the matrices D_k and $\bar{D}_k$; d^y_{j1} are elements of the matrix D^y.

Henceforth, the vectors y and F will be regarded as external signals for the system (10.13) only with the components of the vector y being measured. As was done in the design of combined systems, let us first comply with the conditions under which the manifold $s = 0$ is a sliding manifold for free motion (or with $y = F \equiv 0$). For systems with varying parameters these conditions are, by virtue of Sec. 5, Ch. IX, the inequalities (9.42) which should be met by the coefficients α_{ij} and β_{ij} in the function u^x.

Let us impose the constraints on the class of admissible external signals $f_1, \ldots, f_l$:

$$\frac{\left| \sum_{j=1}^{l} (c^k_{k+1} d^j_k) f_j + \sum_{j=1}^{l} (c^k_{k+1} \bar{d}^j_k) \dot{f}_j \right|}{\sum_{j=1}^{m} \left| \sum_{q=1}^{l} d^y_{jq} f_q \right|} \leqslant M_k \quad (k = 0, \ldots, m-1) \tag{10.16}$$

It is evident that with these constraints and with functions $\theta_{k+i,j}$ $(i = 2, \ldots, m-k;\ j = 1, \ldots, m)$ whose magnitude is constrained there are functions $\theta_{k+1,j}$ $(j = 1, \ldots, m)$ such that

the addends $\dot{s}^F_{k+1}$ in (10.15) ($k = 0, \ldots, m-1$) are identically equal to zero and the estimates

$$|\theta_{k+1,j}(t)| \leqslant \sup_t \frac{M_k + \sum_{i=2}^{m-k} |(c^k_{k+1} b^{k+i}_k)\,\theta_{k+i,j}(t)|}{|c^k_{k+1} b^{k+1}_k|} \tag{10.17}$$

are valid.

(Here, as before, the condition (9.40) is assumed valid.)

The resultant estimates have a recurrent character. First the upper bounds should be found for the functions $\theta_{m,j}$ ($j = 1, \ldots, m$) from (10.17) with $k = m-1$ which depend only on the system parameters and on the class of external signals (10.16) and do not depend on other elements of the matrix $\theta(t)$. Then these estimates are used to find the upper bounds of the functions $\theta_{m-1,j}$ ($j = 1, \ldots, m$) from (10.17) with $k = m-2$, etc. up to the functions θ_{1j} ($j = 1, \ldots, m$).

Thus in the expressions for $\dot{s}_{k+1}$ the function $\dot{s}^F_{k+1}$ dependent on immeasurable external signals is identically equal to zero with the constraints (10.16) and all elements $\theta_{k+i,j}$ ($i = 1, \ldots, m-k$; $j = 1, \ldots, m$) of the matrix θ on which the coefficients in $\dot{s}^y_{k+1}$ depend are constrained time functions. The components of vector y, from which is constituted the function $\dot{s}^y_{k+1}$, we agreed to regard as measurable external signals. For this case the design problem can be solved by using the method described in the previous paragraph for design of combined systems. As a result of the application of the method, we arrive at the analogous relationship (9.48) which also permits the selection of a coefficient in the function u^y:

$$\left.\begin{aligned}
&\operatorname{sign}(c^{k+1}_k b^k_{k+1})\,\alpha^y_{k+1,j} \geqslant \max_{\Psi^y_{k+i,j}} \sup_t \Big[\theta_{k+1,j} - \\
&- |(c^{k+1}_k b^{k+1}_k)^{-1}| \sum_{i=2}^{m-k} (c^k_{k+1} b^{k+i}_k)(\Psi^y_{k+i,j} - \theta_{k+i,j})\Big] \\
&\operatorname{sign}(c^{k+1}_k b^k_{k+1})\,\beta^y_{k+1,j} \leqslant \min_{\Psi^y_{k+i,j}} \inf_t \Big[\theta_{k+1,j} - \\
&- |(c^{k+1}_k b^{k+1}_k)^{-1}| \sum_{i=2}^{m-k} (c^k_{k+1} b^{k+i}_k)(\Psi^y_{k+i,j} - \theta_{k+i,j})\Big] \\
&(k = 0, \ldots, m-1;\ j = 1, \ldots, m)
\end{aligned}\right\} \tag{10.18}$$

The relations (10.17), (10.18) and the inequalities (9.42) make it possible to meet the conditions for a sliding mode to exist over the entire intersection of discontinuity surfaces for the external signals belonging to the class (10.16). The control algorithm suggested here is implemented without measurement of the external signals or of varying plant parameters. As in scalar cases in order to find out whether reaching occurs or not we may use the conditions (9.43) obtained for free motion; in this case they can be represented in the form

$$\max_{\Psi_{j,i}\,\Psi_{ij}^{y}} \sup_{t} \frac{c_{k+1}^{k}\, a_{k}^{n-k}}{c_{k+1,\,n-k}^{k}} < 0 \tag{10.19}$$

(In this equation (10.19), the maximum is found along all Ψ_{ij}, and Ψ_{ij}^{y} on which depends the column vector a_k^{n-k}.)

In conclusion of this section, let us take up the nature of the constraints (10.16). They may seem not quite illustrative, therefore, stricter constraints imposed on each of the functions $f_j(t)$ seem more desirable. Take the case of $m = l$. Let us show that if $\inf_t |\det \| d_{qj}^{y} \|| \neq 0$ and

$$|\dot{f}_j(t)/f_j(t)| \leqslant B_0 \quad (B_0 = \text{const};\ j = 1, \ldots, l) \tag{10.20}$$

then the inequality (10.16) holds. Indeed, let us denote $z = D^{y}F$ and estimate the fraction

$$\sup_{t} \frac{\left|\sum_{j=1}^{l} \left(c_{k+1}^{k}\, d_{k}^{j}\right) f_j + \sum_{j=1}^{l} \left(c_{k+1}^{k}\, \overline{d}_{k}^{j}\right) \dot{f}_j\right|}{\sum_{q=1}^{l} \left|\sum_{j=1}^{l} d_{qj}^{y}\, f_j\right|} \leqslant$$

$$\leqslant \sup_{t} \frac{\sum_{j=1}^{l} |f_j| \left(\left|c_{k+1}^{k}\, d_{k}^{j}\right| + B_0 \left|c_{k+1}^{k}\, \overline{d}_{k}^{j}\right|\right)}{\sum_{q=1}^{l} |z_q|} =$$

$$= \sup_{t} \frac{\sum_{j=1}^{l} \gamma_{kj} |z_j|}{\sum_{q=1}^{l} |z_q|} \leqslant M_k \tag{10.21}$$

Here

$$\gamma_{kj} = \sum_{i=1}^{l} |d_{ij}^*| \cdot \left(\left|c_{k+1}^k d_k^i\right| + B_0 \left|c_{k+1}^k \bar{d}_k^i\right|\right)$$

d_{ij}^* are elements of the inverse matrix $(D^y)^{-1}$. As all coefficients γ_{kj} are bounded time functions, there are certainly positive numbers M_k such that make the inequalities (10.21) hold. Consequently, for input signals of the class (10.20) the constraints (10.16) hold.

The constraints (10.20) are stronger than (10.16). They eliminate, for instance, sign-variable functions whereas the inequality (10.16), generally speaking, holds for all f_j which are not zero simultaneously. Thus for $m = l = 2$ and $f_1 = \cos \omega t$, $f_2 = \sin \omega t$ the inequalities (10.20) do not hold any more, which is not necessarily true of (10.16).*

With $l < m$, the reasoning remains true if in the estimate (10.21) only l linearly independent rows of the matrix D^y (10.21) are selected and only their associated addends maintained in the denominator while others are eliminated. Then although the left-hand side in the inequalities (10.21) grows, there are still positive numbers M_k and, consequently, the constraints (10.16) remain true also for this case.

* The inequalities (10.20) may prove untrue not only for sign-variable functions. Thus, with $f = 2 + \sin \omega t^2$ and t large both (10.20) and (10.16) may not hold.

Chapter XI

INVARIANT CONTROL SYSTEMS

Sec. 1. Statement of the Problem and Conditions of Invariance of Sliding Motions

In all previous control problems, the desired sliding equations were obtained by proper selection of coefficients for equations of discontinuity surfaces. In case of a time-varying plant or a plant subjected to disturbances, it is practically important to find a class of systems in which sliding motions do not depend on external signals or variations in the plant parameters. Therefore, it would be useful to note that at the initial stage of the theory of variable structure systems [34] the basic results were obtained for systems with scalar control, where sliding modes were invariant because control was formed as a function of the error and its derivatives. Such systems are described by equations of the form (II.VII) and the resulting sliding modes by virtue of (II.VIII) depend only on the coefficients in the equation of the discontinuity surface.

Now let us take up conditions of invariance of sliding modes for the case of dynamic systems of a general type

$$\dot{x} = f(x, t) + B(x, t)\, u + h(x, t) \tag{11.1}$$

The system (11.1) differs from (2.2) in that it includes an additional n-dimensional vector $h(x, t)$ and the components of the m-dimensional vector u still have discontinuities on the surfaces $s_i(x) = 0$ $(i = 1, \ldots, m)$ in compliance with (2.3).

Let us show that motion in sliding mode is invariant with the vector function $h(x, t)$ if at any time this vector belongs to the span of the columns of the matrix $B(x, t)$. If this condition is met, then there is an m-dimensional vector $\lambda(x, t)$ satisfying the relation

$$h(x, t) = B(x, t)\, \lambda(x, t) \tag{11.2}$$

Proceeding by the equivalent control method, write for the system (11.1) an equation of sliding motion at the intersection of all discontinuity surfaces

$$\dot{x} = [E - B(GB)^{-1}G]f(x, t) - [E - B(GB)^{-1}G]\,h(x, t) \qquad (11.3)$$

where G is an $m \times n$ matrix whose rows are gradients of the functions $s_i(x)$. Direct substitution of the vector $B(x, t) \times \times \lambda(x, t)$ for $h(x, t)$ in equation (11.3) shows that (11.2) is indeed a condition for sliding modes to be invariant with respect to the vector $h(x, t)$.

In further reasoning, this general condition will be used to obtain different kinds of invariance in linear time-varying systems (III.I). The conditions for sliding motions to be independent of external disturbances, for plant parameter variations, and for some group of coordinates to be independent of other coordinates of the system will be treated separately.

Sec. 2. Invariance with External Disturbances

Let the system controlling forced motion of a linear plant be described by the equation

$$\dot{x} = A(t)\,x + D(t)\,F(t) + B(t)\,u \qquad (11.4)$$

The parameters of this equation are found from (III.I). Let us find under what conditions motion in sliding mode along the intersection of the surfaces $s_i = 0$ $(i = 1, \ldots, m)$ is independent of arbitrary external disturbances $f_1, \ldots, f_l$ which are the components of the vector $F(t)$. In the invariance problem discussed here, the equations of motion are assumed independent of disturbances. This statement is different from the one common in the invariance theory where some coordinate should be made independent of disturbances [73, 91, 92]. The disturbances $f_1, \ldots, f_l$ are arbitrary independent time functions. Therefore, invariance conditions should be found for each of them separately. By virtue of (11.2), motion in sliding mode is independent of $f_1, \ldots, f_l$ if each of the columns $d^j(t)$ of the matrix $D(t)$ can be represented as a sum of columns of the matrix $B(t)$. In other words, the system (11.4) may be made invariant with disturbances if there is a matrix $\Lambda_D(t)$ such that the relation

$$D(t) = B(t)\,\Lambda_D(t) \qquad (11.5)$$

is true. In particular, for the system (II.VII) with scalar control in which the equations of sliding (II.VIII) are independent of the scalar disturbance $f(t)$, the above invariance condition holds because in the vectors b and d all elements but the last one are zero and so these vectors are collinear.

What is important is that in systems of this type, motion does not depend on the disturbances, generally speaking, only from the moment a sliding mode arises at the intersection of discontinuity surfaces. Sliding modes can be generated by using the methods of control of forced motion described in Parts II and III. If the external signals cannot be measured, the structure of differential equations should satisfy certain requirements, in particular, for systems with scalar control and a scalar disturbance one of the system equations should be independent of the control, see Ch. VIII. In the cases where these requirements are not met, the desired motion structure can be obtained artificially by introducing linear filters with discontinuous parameters into the system. A design method built around this idea is described in Ref. [45] for systems with invariant sliding motions.

Sec. 3. Invariance with Plant Parameters

Let us consider a system of control of free motion of a plant with time-varying parameters

$$\dot{x} = A(t)\,x + \Delta A(t)\,x + B(t)\,u \tag{11.6}$$

where $\Delta A(t)$ is a matrix of varying parameters whose effect on the control process is to be eliminated. In this case too, the possibility of expanding the column vectors of the matrix $\Delta A(t)$ along the column vectors of the matrix $B(t)$ proves the feasibility of invariance with elements of $\Delta A(t)$. The existence of the matrix $\Lambda_A(t)$ for which

$$\Delta A(t) = B(t)\,\Lambda_A\,(t) \tag{11.7}$$

is a sufficient condition for sliding motions to be independent of $\Delta A(t)$ in the system (11.6) over the intersection of discontinuity surfaces $s_i = 0$ $(i = 1, \ldots, m)$. The condition (11.7)

may be made weaker if sliding motions with invariance as one of their properties arise on the manifold (III.II). Therefore, the vector $\Delta A(t)\,x$ for points of this manifold is written in the form

$$\Delta A(t)\,x = [\Delta A'(t) - \Delta A''(t)\,(C'')^{-1}C']\,x^m \tag{11.8}$$

where x^m, C' and C'' are found from (III.IV)

$$\Delta A(t)\,x = \| \underbrace{\Delta A'(t)}_{n-m} \mid \underbrace{\Delta A''(t)}_{m} \|$$

In compliance with (11.8), invariance does exist if there is a matrix $\Lambda'_A(t)$ for which the relation

$$\Lambda A'(t) - \Lambda A''(t)\,(C'')^{-1}\,C' = B(t)\,\Lambda'_A(t)$$

is true.

For the system (II.VII) in which motion in sliding mode (II.VIII) is independent of the coefficients $a_1, \ldots, a_n$, all rows of the matrix $\Delta A(t)$ but the last one are equal to zero. All elements but the last one also are equal to zero in the vector b of this system. This implies that all columns of the matrix $\Delta A(t)$ and the column b are collinear and, consequently, the condition of invariance of sliding modes, (11.7), holds for the system (II.VII).

Sec. 4. Selective Invariance

Let the control system motion be described by the equations

$$\left.\begin{aligned} \dot{x}^1 &= A_{11}\,x^1 + A_{12}\,x^2 + B_1 u^1 \\ \dot{x}^2 &= A_{21}\,x^1 + A_{22}\,x^2 + B_2 u^2 \end{aligned}\right\} \tag{11.9}$$

where x^1 and x^2 are n_1- and n_2-dimensional vectors; u^1 and u^2 are m_1- and m_2-dimensional control vectors; A_{11}, A_{12}, A_{21}, A_{22}, B_1, B_2 are constant or time-varying matrices. Components of the vector u^1 have discontinuities on the planes $s_i^1(x^1) = 0$ $(i = 1, \ldots, m_1)$ and of the vector u^2, on the planes $s_i^2(x^2) = 0$ $(i = 1, \ldots, m_2)$.

It is necessary to find the conditions under which the components of the vector x^1 are independent of the vector x^2 during

motion in sliding mode. The components of the vector x^2 in equations for x^1 can be regarded as external signals. Therefore to solve the problem, the invariance condition of Sec. 2 can be used. For the system (11.9) the condition (11.5) is of the form

$$A_{12} = B_1 \Lambda_x \tag{11.10}$$

If there is a matrix Λ_x such that the condition (11.10) holds, then motion in sliding mode along the intersection of the planes $s_i^1 = 0$ $(i = 1, \ldots, m_1)$ is invariant relative to the components of the vector x^2.

Chapter XII

THE USE OF SLIDING MODES IN OPTIMIZATION PROBLEMS

Sec. 1. Statement of the Problem and Principles Underlying Optimization Systems

This chapter will treat static optimization. Static optimization consists in finding a combination of input parameters such that the scalar output of the plant attains an extremal, e.g. minimal, value.

For a one-dimensional case where the input parameter is scalar, the essence of the approach is as follows. The output of the plant is compared with a certain setpoint which is a monotonically decreasing time function. The plant input is derived from the difference between the output and the setpoint and it should make this difference vanish. As a result, the plant output which tracks the monotonically decreasing input reaches its minimum. The specific feature inherent in design of such a tracking system is that the local plant gain is unknown and varies both in magnitude and in sign. In physical terms, the controller without any clue to this gain should insure that the plant input changes so that it is certain to decrease by tracking the setpoint no matter in what part of the extremal curve the plant is at a particular moment in time. The problem of tracking without measurement of the local gain, formulated in this way is solved by deliberate introduction of motion in sliding mode. Note that obtaining data on the local gain implies essentially measuring the gradient of the function to be minimized (or some of its projections) which is normally required in self-optimizing systems. An important feature is that measurement itself in most cases requires introduction of special hardware causing probe signals at the plant input and analyzing the response to them at the output [70, 76].

The basic purpose of this chapter is to describe the essence of the method, and therefore, one-dimensional optimization is given most attention. Then the application of the method to multi-dimensional omptimization problems and its modifications for optimization in the presence of constraints such as equalities and inequalities upon input parameters will be described. The applicability of algorithms to optimization of time-varying plants and the potential of algorithms in various procedures of changing the search direction in the space of input parameters also will be described.

Sec. 2. One-Dimensional Optimization at a Constant Rate of Search

Take up the simplest problem of optimizing for a static plant described by the equation

$$y = f(x) \tag{12.1}$$

where x and y are input and output signals and the function $f(x)$ is differentiable and reaches a maximum at a certain unknown value of the input x_0 and $\frac{df}{dx} \neq 0$ with $x \neq x_0$. The problem is to organize a search so as to minimize the plant output. Let us try to solve this optimization problem in the class of analog-type algorithms whereby the input signal varies with the plant state. Generally such a system consists of a controller (C in Fig. 15) generating the control u which is fed to the integrator. As a result, the search goes on. Following the optimization procedure of Sec. 1, a system should be developed in which the output y tracks some monotonically decreas-

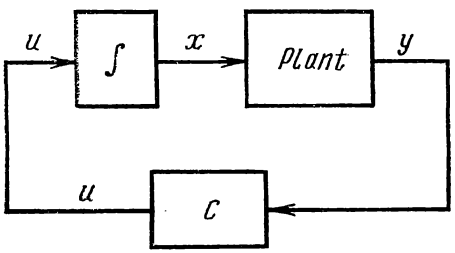

FIG. 15

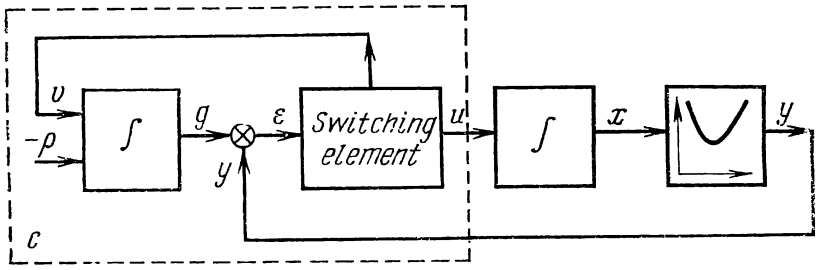

FIG. 16

ing function and thus approaches the extremum. The purpose of the control is to make the difference

$$\varepsilon = g(t) - y(t) \tag{12.2}$$

vanish where $g(t)$ is a monotonically decreasing function, henceforth referred to as the setpoint. This Section will treat an optimization system in which the setpoint decreases at a constant rate.

A solution to a problem thus formulated will be sought in the class of relay systems in which the control u can take just one of the two possible values. The flow chart of such a system is shown in Fig. 16, and the motion within that system is described by the equations

$$\left.\begin{aligned} y = f(x),\ \dot{g} = -\rho + v \\ \dot{x} = u, \quad u = A\ \text{sign}\ (s_1 s_2) \end{aligned}\right\} \tag{12.3}$$

where ρ and A are constant; $A > 0$, $\rho > 0$, $s_1 = \varepsilon$, $s_2 = \varepsilon + \delta$, δ is a small positive value. The purpose of the additional signal v will be described below.

Normally in relay systems the control function is of the form $u = A$ sign ε. But in using such a control in our tracking system in one branch of the extremal-type curve it will result in negative feedback and in the other, in positive feedback. Consequently, in such systems (provided, of course, that the gradient value is not measured), the quantity y to be optimized cannot follow the setpoint $g(t)$. Let us show that this problem can be solved by using the control (12.3) which is a relay function of two arguments (Fig. 17).

Let the initial conditions be such that

$$s_1(t_0)\, s_2(t_0) < 0 \tag{12.4}$$

$$A \left| \frac{df}{dx} \right| > \rho \tag{12.5}$$

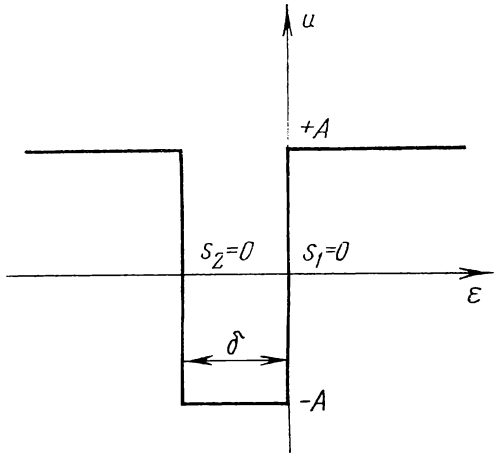

FIG. 17

and assume for a moment that the function v is equal to zero. Let us consider the behaviour of the system under such initial conditions by using the equation of motion with respect to the error coordinate; by virtue of (12.2), (12.3) this equation is of the form

$$\dot{\varepsilon} = -\rho - \frac{df}{dx} A \text{ sign } (s_1 s_2) \tag{12.6}$$

Since with $\dot{\varepsilon} = \dot{s}_1 = \dot{s}_2$ under the initial conditions (12.4) for one function, s_1 or s_2, the inequality $s_1\dot{s}_1 < 0$ or $s_2\dot{s}_2 < 0$ holds. Therefore, s_1 (or s_2) will change its sign and so will the derivative $\dot{s}_1$ (or $\dot{s}_2$) by virtue of (12.5), (12.6); in other words, the inequality $s_1\dot{s}_1 < 0$ (or $s_2\dot{s}_2 < 0$) holds in the vicinity of the point $s_1 = 0$ (or $s_2 = 0$). From the condition (1.9) it follows that a sliding mode is bound to start in the system and during this motion $s_1 \equiv 0$ (or $s_2 \equiv 0$).

Let us suppose that the condition $A \left| \frac{df}{dx} \right| > \rho$ is not valid only in a certain vicinity of the extremum. Then because either $y = g$ or $y = g + \delta$, and since g is a monotonically decreasing function ($\dot{g} = -\rho < 0$), the plant output will reach this vicinity in a finite time period. Select now the signal v, mentioned above, such that it, firstly, insures the initial conditions of the type (12.4) in the system and, secondly, makes it possible to stabilize the system motion in the vicinity of the extremum. The need in solving these problems is dictated by the fact that

the above reasoning applies only to initial conditions of the type (12.4) and once the extremum vicinity is reached there is no point in further decrease of $g(t)$. Therefore, the function v should be selected with a magnitude large enough, positive with $s_1 < 0$, $s_2 < 0$, negative with $s_1 > 0$, $s_2 > 0$ and equal to zero with $s_1 s_2 < 0$. Then caused by "fast" change of the setpoint g the initial conditions of the type (12.4) will appear in the system. Since the integrator generating the setpoint $g(t)$ is an element of the controller, this quantity may be varied as fast as described and in further discussion it will be assumed that initial conditions appear in the system instantaneously. Then, in compliance with the reasoning given above, a sliding mode starts in the system which brings the system to the extremum with $v = 0$. During this motion, either s_1 or s_2 is of a constant sign while the other is of a variable sign varying at a high frequency and with low amplitude*. With the above law for variation of the function v and with the identity of the signs of s_1 and s_2 during a sliding mode, v is nonzero, the function $\dot{g}$ at these times is not equal to $-\rho$, and the setpoint $g(t)$ may be found to be a function other than monotonically decreasing. This phenomenon may be eliminated if the switches implementing the function v have symmetrical hysteresis loops whose width exceeds the double amplitude of oscillations of s_1 or s_2 in sliding mode. In this case the function v is of the form

$$v = \begin{cases} -M \text{ with } s_1 - \Delta > 0,\ s_2 > 0 \\ 0 \quad \text{with } (s_1 + \Delta)(s_2 - \Delta) < 0 \\ M \text{ with } s_1 < 0,\ s_2 + \Delta < 0,\ M = \text{const},\ M \gg \rho \end{cases} \tag{12.7}$$

where 2Δ is the width of the hysteresis loop (Fig. 18). Over the intervals $|s_1| < \Delta$ and $|s_2| < \Delta$, v maintains the value it had before the describing point reached these intervals**. With this way of generating the function v the describing point at the initial time is "tossed" in the region $(s_1 + \Delta)(s_2 - \Delta) < 0$ rather than into the region $s_1 s_2 < 0$; then, as before, the sliding mode takes the plant output into a certain domain E con-

* Recall that in any real system nonidealities make motion in sliding mode occur in a certain vicinity of the discontinuity surface rather than on the surface itself.

** The state of the system is characterized in terms of the position of the describing point on the axis ε.

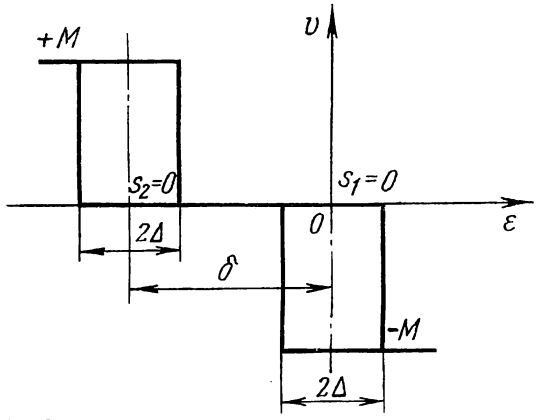

FIG. 18

taining an extremum and where the condition (12.5) is not met, or

$$A\left|\frac{df}{dx}\right| < \rho \tag{12.8}$$

The condition (12.5) identifies a domain where the rate of motion to the extremum is constant. As for the motion in the domain E given by equation (12.8), it can be proved that once in this domain the quantity y to be optimized continues decreasing in oscillating mode with the rate of this motion gradually falling, and at the end of the transient process the maximal value of y does not exceed $y_{\min} + \Delta$.

Let us take up the motion of the system in the domain E. For $v = 0$ the equality $\dot{\varepsilon} = -\rho \pm A\frac{df}{dx} < 0$ holds. Consequently, no matter whether it was s_1 or s_2 that was zero during motion in sliding mode, the describing point reaches the point $s_2 = -\Delta$ in further motion; then according to (12.7) the signal v instantaneously restores the condition $s_2 = +\Delta$ and oscillations start. While moving in the interval $0 \leqslant s_2 \leqslant \Delta$, the plant output y increases with $\frac{df}{dx} < 0$ and decreases with $\frac{df}{dx} > 0$ by

$$\Delta y_1 = \int_0^{\tau_1}\left(-A\frac{df}{dx}\right)dt \tag{12.9}$$

and in the interval $-\Delta \leqslant s_2 \leqslant 0$ the value of y decreases with $\frac{df}{dx} < 0$ and increases with $\frac{df}{dx} > 0$ by

$$\Delta y_2 = \int_0^{\tau_2} \left(A \frac{df}{dx} \right) dt \tag{12.10}$$

where τ_1 and τ_2 are motion durations found in these intervals from the equations

$$\Delta = \int_0^{\tau_1} \left(\rho - A \frac{df}{dx} \right) dt \tag{12.11}$$

$$\Delta = \int_0^{\tau_2} \left(\rho + A \frac{df}{dx} \right) dt \tag{12.12}$$

From the expressions (12.11) and (12.12), it follows readily that $\tau_1 < \tau_2$ with $\frac{df}{dx} < 0$ and $\tau_1 > \tau_2$ with $\frac{df}{dx} > 0$. The change of the output variable y within an oscillation cycle $\tau_1 + \tau_2$ by virtue of (12.9), (12.10) is computed from the expressions

$$\Delta y = - \int_0^{\tau_2 - \tau_1} A \left| \frac{df}{dx} \right| dt \text{ with } \frac{df}{dx} < 0 \tag{12.13}$$

$$\Delta y = - \int_0^{\tau_1 - \tau_2} A \left| \frac{df}{dx} \right| dt \text{ with } \frac{df}{dx} > 0 \tag{12.14}$$

From (12.13), (12.14) it follows that the plant output in the domain E decreases in sliding mode. Once the extremum is reached, oscillations continue in the system and the system accuracy is estimated in terms of decrease in Δy during these oscillations.

According to the expressions (12.11) or (12.12), $\Delta y = \int_0^{\tau_1} A \left| \frac{df}{dx} \right| dt = \Delta - \rho\tau_1$ or $\Delta y = \int_0^{\tau_2} A \left| \frac{df}{dx} \right| dt = \Delta - \rho\tau_2$, or the error of search is certain not to exceed Δ. It would be

useful to note that the error of search is near-zero if in the Δ-vicinity of the extremum $\frac{df}{dx}$ may be assumed approximately zero.

Compute the mean rate of the input coordinate approaching the extremal point in the domain E. Assume that Δ is small enough, or that changes of $\frac{df}{dx}$ within the oscillation cycle can be neglected. Then from (12.11) and (12.12), it follows that $\tau_1 = \Delta/\rho - A\frac{df}{dx}$ and $\tau_2 = \Delta/\rho + A\frac{df}{dx}$. The magnitude of the mean rate is given by the expression

$$|\dot{x}_{av}| = A\frac{|\tau_1 - \tau_2|}{\tau_1 + \tau_2} = A\frac{A\left|\frac{df}{dx}\right|}{\rho} < A \qquad (12.15)$$

In conclusion of this Section, it is advisable to note the basic difference of this self-optimizing system from other, widespread relay optimization systems, described in sufficient detail in [77].

Normally in relay self-optimizing systems the derivatives of the function to be minimized are measured. This information is used to generate relay signals resulting in the motion towards the extremum point. Because of the necessity of measurements, the system includes differentiators or generators of probe signals to the plant input and analyzers of the 48 output response (e.g. measurements of the ratio of input and output derivatives, their signs or the phase shift for periodic signals, etc.).

The method of solution described here relies on a system which is capable of controlling a plant with sign-varying and unknown gain. The derivative of the function to be minimized acts as this gain steering the plant output to a minimal possible value. To clarify the idea of this method of control let the discontinuous control, Fig. 17, be approximately realized by high gain amplifiers with saturation and thus be a continuous function of the error ε (Fig. 19). This response curve has two very steep slopes of opposite signs. With any sign of the plant gain, one of these coefficients is associated with a stable system and the other, with an unstable system. The initial conditions

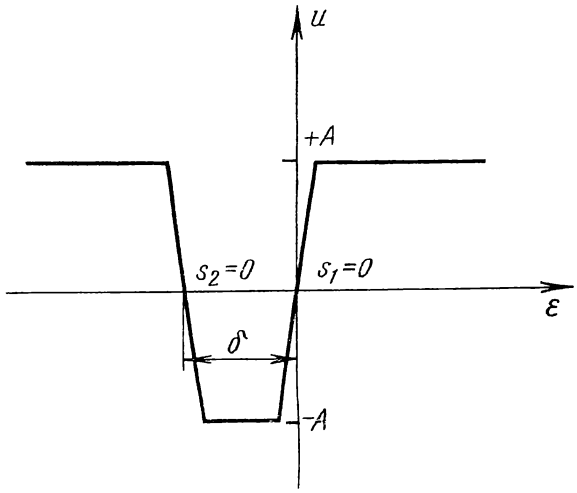

FIG. 19

are selected such that the value of ε is in the medium part of the curve (Fig. 19). Following this, the system automatically switches to that slope which is associated with stability. A sufficiently high slope insures high accuracy of tracking the monotonically decreasing setpoint by the output quantity (Fig. 16); as a result, the system moves to the extremum.

This approach eliminates the need in measuring some plant responses and oscillations which would be caused by probe signals. High frequency oscillations during sliding motion cannot, of course, be regarded as probe signals because they are caused by the fact that switching elements cannot be made ideal and in control using continuous characteristics (Fig. 19) there are no such oscillations at all.

Sec. 3. One-Dimensional Optimization with a Variable Rate of Search

It is well-known that an important characteristic of any self-optimizing system, other than the search error, is the time within which the extremum is found. Response evidently is closely related with constraints on the control. In the system described above, the control is not constrained. Hence, the control can be made as high as desired by proper selection

of ρ, the rate at which the output quantity approaches the extremum. If, however, the control is constrained

$$| u | \leqslant u_0 \tag{12.16}$$

then motion to the extremum is definitely not at the maximal rate. Actually, the maximal rate at which the input quantity changes is u_0. On the other hand, with system motion in sliding mode where $\dot{y} = \dot{g} = -\rho$ the inequality (12.5) gives

$$| \dot{x} | = \frac{| \dot{y} |}{\left| \frac{df}{dx} \right|} < A \leqslant u_0 \tag{12.17}$$

The system motion in the domain E described by the condition (12.8) is oscillatory and, by virtue of (12.15), the mean rate of input change in this domain is estimated by the inequality

$$| \dot{x}_{\text{av}} | = A \frac{A \left| \frac{df}{dx} \right|}{\rho} < A \leqslant u_0 \tag{12.18}$$

Comparison of (12.17) and (12.18) easily shows that attempts at accelerating the search by increasing the rate of change ρ of the setpoint would not bring the desired results because, firstly, the convergence rate of search in the domain E is decelerated by virtue of (12.18) and, secondly, the domain E itself increases with ρ. It is necessary therefore to design a system where without direct measurement of df/dx the rate of change ρ is selected close to the maximal possible rate equal to $| df/dx | u_0$. In such a system, a sliding mode would cause a monotonic motion to the extremum at a near-maximal rate. To obtain a system with such a property, select A equal to u_0 and the setpoint $g(t)$, in distinction from the system (12.3), which depends on the control which is of the following form

$$\left.\begin{aligned} \rho &= -\rho_0 \left(1 - \frac{u}{u_0} \operatorname{sign} u_{\text{av}}\right) \\ \tau \dot{u}_{\text{av}} &+ u_{\text{av}} = \frac{u}{u_0} \end{aligned}\right| \tag{12.19}$$

where ρ_0 is const, $\rho_0 > 0$, and u_{av} is the average value of the control, see Sec. 6, Ch. II, which can be obtained by using a first-order filter with a sufficiently small time constant τ

Let us explain in what way the extremum is sought in the system (12.3) with the setpoint rate varying in compliance with (12.19). If there is no sliding mode the control u is equal to u_0 or $-u_0$, the sign of u_{av} is that of u^* and, consequently, the setpoint rate ρ is equal to zero. From the relation (12.6), it follows that with $\rho = 0$ at least one of the inequalities, $s_1 \dot{s}_1 < 0$ or $s_2 \dot{s}_2 < 0$ is true in any point outside the extremum and in compliance with (1.9) a sliding mode is certain to start in the system. This reasoning is somewhat qualitative because of the assumption that the time constant τ of the filter is small enough. Analysis of the system behaviour with due regard for the free component of the filter motion reveals that a sliding mode occurs if the relation $2\tau\rho_0 \ln 2 < \Delta$ holds where 2Δ is the width of the hysteresis loop in the unit realizing the function v.

To derive conditions for a sliding mode to exist in the system (12.3), (12.19) let us assume that the auxiliary control v insures the initial conditions $s_1 s_2 < 0$ and that at the initial time $\frac{df}{dx} < 0$ and the output u_{av} of the filter is negative, i.e. it is of the sign of the control u. In compliance with (12.3), (12.7), (12.19) in this case

$$\dot{\varepsilon} = \dot{s}_2 = -\rho_0 \left(1 - \frac{u}{u_0} \operatorname{sign} u_{av}\right) - \frac{df}{dx} u =$$

$$= -\rho_0(1 + \operatorname{sign} s_2 \operatorname{sign} u_{av}) - u_0 \left|\frac{df}{dx}\right| \operatorname{sign} s_2 \qquad (12.20)$$

Under these initial conditions the value of s_2 decreases by virtue of (12.20) and u_{av} remains negative until the sign of s_2 changes because u_{av} is the output of the filter with negative input. Once s_2 changes sign, $\dot{s}_2$ is given by the expression

$$\dot{s}_2 = -2\rho_0 + u_0 \left|\frac{df}{dx}\right| \qquad (12.21)$$

It is evident that with $2\rho_0 < u_0 \left|\frac{df}{dx}\right|$ a sliding mode starts at the point $s_2 = 0$. Otherwise s_2 continues decreasing with $u = +u_0$ until the value of u_{av} found from the equation $\tau \dot{u}_{av} + u_{av} = +1$ becomes positive following which a sliding mode

---

* The signs of u_{av} and u are the same if the time constant τ is sma l enough and the free component of the filter motion is negligible.

starts in the system. This reasoning holds if in the course of these motions v is zero, or $s_2 > -\Delta$. The value of s_2 takes a minimal value at time T when the sign of u_{av} changes. This value is estimated by the inequality

$$s_{2\,\min} \geqslant -2\rho_0 T \tag{12.22}$$

Let us estimate the value of T from the equation $0 = 1 - [1 - u_{av}(0)]\, e^{-\frac{T}{\tau}}$ with due regard for the condition $|u_{av}(0)| \leqslant 1$: $T = \tau \ln [1 - u_{av}(0)] \leqslant \tau \ln 2$. Substituting this value into the inequality (12.22) gives conditions under which $s_{2\,\min} > -\Delta$:

$$2\rho_0 \tau \ln 2 < \Delta \tag{12.23}$$

Consequently, in this system a sliding mode is bound to start provided that the condition (12.23) holds. (It is easy to see that the same result is obtained in the cases where $\frac{df}{dx}$ and u_{av} are not negative at the initial time.)

As was reported in Ch. II, to obtain equations of sliding mode the control function u should be replaced by u_{eq}, an equivalent control which is equal to u_{av}. This implies that the rate of setpoint (12.19) in sliding mode is

$$\rho = -\rho_0 \left(1 - \frac{|u_{eq}|}{u_0}\right) \tag{12.24}$$

where u_{eq} is a certain continuous function which, according to the condition (3.3) necessary for a sliding mode to start, stays between $-u_0$ and u_0. This reasoning leads to the conclusion that a sliding mode starts with any value of ρ_0. As the control u is bounded, the plant output can track only the setpoints whose rate is bounded and which depend on ρ. This implies that as ρ_0 tends to infinity $|u_{eq}|$ should tend to u_0. Since $\dot{x} = u$ and in sliding mode $\dot{x} = u_{eq}$ the input x tends to a maximal rate if ρ_0 increases.

Sec. 4. Optimizing a Multi-Dimensional Plant

Let us now take up multi-dimensional search where the plant input x is an n-dimensional vector with components $x_1, \ldots, x_n$, and it is required to minimize the scalar output $y = f(x)$.

Let us resort to a technique in which some method of one-dimensional optimization is used and the direction of search in the space of input parameters is changed, Ref. [115]. (For example, recurrence as a function of the state of a system, with random shapes, etc.) The motion of such a system is described by the equation

$$\dot{x} = ku \tag{12.25}$$

where k is a piecewise constant vector $(k_1, \ldots, k_n)$ and the scalar control u depends on the method of one-dimensional optimization. Select u by the search algorithm (12.3), (12.7), Sec. 1, for the case where the setpoint rate ρ varies in compliance with (12.19) and the value of A is equal to u_0.

Write an equation of system motion with respect to the output

$$\dot{y} = (\text{grad } f \cdot k)\, u \tag{12.26}$$

where grad f is a row vector with elements $\frac{df}{dx_i}$.

With a constant vector k the describing point moves from any initial position along a straight line parallel to that vector until it reaches the directional extremum on that straight line at the point $(\text{grad } f \cdot k) = 0$. When the directional extremum is reached, the direction of search should be changed by changing the vector k. Let us show that if motion to the extremum proceeds in sliding mode then the data on that moment can be obtained by measuring u_{av} equal to u_{eq}. To compute u_{eq}, let us use equation (12.6) which in our case can be written, according to (12.19), (12.26) as

$$\dot{\varepsilon} = -\rho_0 \left(1 - \frac{u \operatorname{sign} u_{av}}{u_0}\right) - (\text{grad } f \cdot k)\, u$$

The value of u_{eq} is the solution of the equation $\dot{\varepsilon} = 0$ with respect to u. Find $|u_{eq}|$ bearing in mind that in sliding mode $u_{av} = u_{eq}$:

$$|u_{eq}| = \frac{\rho_0 u_0}{\rho_0 - u_0 (\text{grad } f \cdot k) \operatorname{sign} u_{eq}} \tag{12.27}$$

$$u_{eq} = -\frac{\rho_0 \left(1 - \frac{|u_{eq}|}{u_0}\right)}{\text{grad } f \cdot k} \tag{12.28}$$

As in the one-dimensional case, the value of $| u_{eq} |$ stays between zero and u_0. From this condition and (12.28), it follows that sign $u_{eq} = -$ sign (grad $f \cdot k$), or equation (12.27) is of the form

$$| u_{eq} | = \frac{\rho_0}{\rho_0 + u_0 | \operatorname{grad} f \cdot k |} u_0$$

This relation implies that while approaching the directional extremum (or the point grad $f \cdot k = 0$) u_{eq} approaches u_0. These data can be made use of by measuring u_{av} equal to u_{eq} as the output of the filter (12.19) and changing the direction of search when

$$u_0 - | u_{eq} | \leqslant \delta_0 \tag{12.29}$$

where δ_0 is a certain small positive number. The laws of changing k can be very different. Thus, in using the Gauss-Seidel procedure, one of the components is made successively nonzero and the others, zero, or the values of the components of k are selected randomly, etc. We leave aside convergence which is distantly related to the operation of search algorithms suggested here and depends chiefly on the form of functions to be optimized. Let us only note that in optimizing multi-dimensional plants there is no need in hardware for measurement of the gradient vector or its various projections. Only an element changing the direction of search depending on the equivalent control is needed in addition to the hardware for the one-dimensional case; this equivalent control is easily obtained by averaging the discontinuous control.

Sec. 5. Optimization with Input Parameters Constrained

In many cases the vector of arguments of the function $f(x)$ to be optimized cannot be selected arbitrarily for optimization. Such statements of the problem are characteristic also of many programming problems. Let us first consider cases where the constraints are the equalities

$$\gamma_i(x) = 0 \quad (i = 1, \ldots, m) \tag{12.30}$$

The problem is solved by using sliding modes in the following way. Introduce an additional m-dimensional control into the

system (12.25); each component has discontinuities on the associated surface $\gamma_i(x) = 0$. This control insures motion in sliding mode along the intersection of the surfaces $\gamma_i(x) = 0$ $(i = 1, \ldots, m)$ with any value of the vector ku; consequently, the constraints (12.30) imposed on input parameters hold automatically. Following this, the optimization problem is solved by using the method of Sec. 4.

The system equation whereby this procedure is implemented is of the form

$$\dot{x} = ku + B_\gamma u^\gamma \tag{12.31}$$

where B_γ is a certain $n \times m$ matrix; u^γ is an m-dimensional control with components $u_1^\gamma, \ldots, u_m^\gamma$:

$$u_i^\gamma = \begin{cases} u_i^{\gamma+} \text{ with } \gamma_i(x) > 0 \\ u_i^{\gamma-} \text{ with } \gamma_i(x) < 0 \ (i = 1, \ldots, m) \end{cases} \tag{12.32}$$

Using the control hierarchy method, select the matrix B_γ and the quantities $u_i^{\gamma+}$ and $u_i^{\gamma-}$ such that a sliding mode arises at the intersection $\gamma_i(x) = 0$ $(i = 1, \ldots, m)$. The intersection $\gamma_i(x) = 0$ $(i = 1, \ldots, m)$ is a sliding manifold if for the system (12.31) the conditions, analogous to (3.30) are met

$$\left.\begin{aligned} &\operatorname{grad} \gamma_{r+1} b_r^{r+1} u_{r+1}^{\gamma+} < \min_{u, u_{r+2}^\gamma, \ldots, u_m^\gamma} [-u \operatorname{grad} \gamma_{r+1} k^r - \\ &- \sum_{i=2}^{m-r} \operatorname{grad} \gamma_{r+1} b_r^{r+i} u_{r+i}^\gamma] \\ &\operatorname{grad} \gamma_{r+1} b_r^{r+1} u_{r+1}^{\gamma-} > \max_{u, u_{r+2}^\gamma, \ldots, u_m^\gamma} [-u \operatorname{grad} \gamma_{r+1} k^r - \\ &- \sum_{i=2}^{m-r} \operatorname{grad} \gamma_{r+1} b_r^{r+i} u_{r+1}^\gamma] \end{aligned}\right\} \tag{12.33}$$

The elements of the inequalities (12.33) which should be valid for all $r = 0, \ldots, m - 1$ are found by the procedure of Ch. IV used for obtaining the conditions (3.27).

The conditions (12.33) can be met if the signs of the functions grad $\gamma_{r+1} b_r^{x+1} (r = 0, \ldots, m - 1)$ are known. When no such data are available, the control principle of Sec. 2 for plants with sign-varying gain can be used whereby each con-

trol component should have discontinuities on two "close" surfaces

$$\left.\begin{aligned} u_i^{\gamma} &= u_{0i} \text{ sign } \gamma_{i1}\gamma_{i2} \\ \gamma_{i1} &= \gamma_i + \omega_i \\ \gamma_{i2} &= \gamma_i + \omega_i + \delta \end{aligned}\right\} \tag{12.34}$$

where $u_{0i} = \text{const}$; δ is a small positive quantity and the function ω_i insures, by analogy with v of (12.7), the initial conditions $\gamma_{i1}\gamma_{i2} < 0$:

$$\dot{\omega}_i = \begin{cases} -M & \text{with} \quad \gamma_{i1} - \Delta > 0 \quad \text{and} \quad \gamma_{i2} > 0 \\ -\alpha\omega_i & \text{with} \quad (\gamma_{i1} + \Delta)(\gamma_{i2} - \Delta) < 0 \\ M & \text{with} \quad \gamma_{i1} < 0 \quad \text{and} \quad \gamma_{i2} + \Delta < 0 \end{cases} \tag{12.35}$$

In (12.35) $\alpha, M = \text{const}$; $\alpha > 0$; $M > 0$; 2Δ is the width of the hysteresis loop; over the intervals $|\gamma_{i1}| < \Delta$; $|\gamma_{i2}| < \Delta$ the quantity $\dot{\omega}_i$ retains that value ($-M$, $-\alpha\omega_i$ or M) which it had before reaching these intervals. The value of M is such that for any $i = 1, \ldots, m$ the initial conditions $\gamma_{i1}\gamma_{i2} < 0$ arise. Then with the control hierarchy valid the component u_1^{γ} insures a sliding mode on one of the surfaces $\gamma_{11} = 0$ or $\gamma_{12} = 0$ (as was the case with the one-dimensional problem of Sec. 2); the component u_2^{γ} does the same on the intersection of one of these surfaces with the surface $\gamma_{21} = 0$ or $\gamma_{22} = 0$, etc. Since the values of ω_i which are the solutions to the equations $\dot{\omega}_i = -\alpha\omega_i$ tend to zero, all the surfaces $\gamma_{i1} = 0$ and $\gamma_{i2} = 0$ asymptotically approach the surfaces $\gamma_i = 0$ (with an accuracy to δ). For this reason the constraints (12.30) hold without using the data on gradients of the function $\gamma_i(x)$. Relations which lead to the values of u_{0i} also can be obtained through the reasoning which led to the conditions (3.30). The difference is that time derivatives of the functions ω_i should be represented in equations which are similar to equations (3.29). The following relations result:

$$u_{0,r+1} > \sup \frac{1}{|\operatorname{grad} \gamma_{r+1} b_r^{r+1}|} \left(|u \operatorname{grad} \gamma_{r+1} k^r| + \right.$$

$$\left. + \sum_{i=2}^{m-r} |\operatorname{grad} \gamma_{r+1} b_r^{r+i} u_{0,r+1}| + \alpha |\omega_{r+1}| \, (r = 0, \ldots, m-1) \right) \tag{12.36}$$

In (12.36) the upper bound should be computed with respect to all components of gradient vectors (their ranges are assumed to be known) and to the components of the vector k^*. In both cases, (12.31) and (12.34), the equations of sliding mode over the intersection of the surfaces $\gamma_i = 0$ $(i = 1, \ldots, m)$ given by the equivalent control method are of the form

$$\dot{x} = [E - B_\gamma (G_\gamma B_\gamma)^{-1} G_\gamma] ku \tag{12.37}$$

where G_γ is the matrix whose rows are gradients of the functions $\gamma_i (i = 1, \ldots, m)$.

The main control is selected by the method of optimization without constraints, Sec. 3. With arbitrary sequence of k variations the additional controls u_i^γ "channel" the velocity vector found from (12.37) along the intersection of discontinuity surfaces so that the constrains (12.30) are certain to be valid.

The controller is designed starting with the selection of a control u; then u_m^γ and subsequently u_{m-1}^γ, etc. up to u_1^γ are selected in compliance with the control hierarchy method.

Now let us take up the constraints in the form of inequalities

$$h_i(x) \leqslant 0 \ (i = 1, \ldots, l) \tag{12.38}$$

Let us introduce additional coordinates $z_1, \ldots, z_l$ and assuming that they are also input parameters, use the method of this section for finding the minimum of the function $f(x)$ in the presence of inequality-like constraints

$$h_i^*(x, z) = h_i(x) + z_i = 0 \ (i = 1, \ldots, l) \tag{12.39}$$

Solution of this problem is evidently the same as for the problem without constraints. Indeed, if x^* is the minimum point of the function $f(x)$, then the values of z_i are determined such that $h_i(x^*) = -z_i^*$; in other words, the surfaces $h_i^*(x, z^*) = 0$ in the space x, z go through the point x^*. The point x^* may

---

* If grad $\gamma_{r+1} b_r^{r+1}$ is found to be near zero, the direction of the vector b_r^{r+1} should be changed. This can be done automatically by the procedure of Sec. 3 whereby $u_{r+1,\,\mathrm{eq}}^\gamma$ is measured, and with $|u_{r+1,\,\mathrm{eq}}^\gamma|$ approaching the extreme value of $u_{r+1,\,0}$ (which evidences the approach of grad $\gamma_{r+1} b_r^{r+1}$ to zero) the components of the vector b_r^{r+1} are changed.

be found to stay in a domain eliminated by the inequalities (12.39). Therefore, the system should include elements which would prevent negative values of the coordinates z_i because with the conditions (12.39) this results in disruption of the constraints (12.38). This approach may be implemented in a system described by the equations

$$\left.\begin{aligned} \dot{x} &= k^x u + B'_h u^h \\ \dot{z} &= k^z u + B''_h u^h + u^z \end{aligned}\right\} \tag{12.40}$$

where z is a vector with components $z_1, \ldots, z_l$; the matrices $B'_h B''_h$, n- and l-dimensional vectors k^x and k^z, the scalar and vector controls u and u^h are selected so as to solve the optimization problem in the presence of the constraints (12.39), a problem already discussed. The components of the l-dimensional vector u^z have discontinuities on the planes $z_i = 0$

$$u_i^z = \begin{cases} M_z & \text{with } z_i < 0 \\ 0 & \text{with } z_i > 0 \end{cases} \tag{12.41}$$

$$M_z > \max_{k_i^z u, u_j^h} \left(k_i^z u + \sum_{j=1}^{l} b''_{ij} u_j^h \right); \quad i = 1, \ldots, l \tag{12.42}$$

k_i^z, b''_{ij} are elements of the vector k^z and the matrix B''_h; u_i^h are components of the vector u^h. The condition (12.42) implies that the positive value of M_z is certain to exceed that of any element of the vector $k^z u + B''_h u^h$; and it follows from this condition that in the feasible domain the control u^z does not affect motion.

In this system the point x^* is sought and found, if it stays in the feasible domain. If the constraints are active and the point x^* is in the banned domain, the paths of the describing point on the surfaces $h_i^* = 0$ reach one or several planes $z_i = 0$ during the search and with the condition (12.43) valid a sliding mode starts at the intersection of these planes. As in the problem with constraints in the form of equalities, the motion in sliding mode results in finding an extremal value of function $f(x)$ at the boundary of the feasible domain. If the constraints of both types, (12.30) and (12.38) are imposed on the system coordinates, then both algorithms should be used simultaneously.

To insure convergence of all algorithms described here appropriate assumptions should be made on the form of the function to be optimized and on the functions specifying the domain of feasible values for input parameters; for instance, only convex functions may be treated.

Sec. 6. Discussion of the Optimization Method

This section will be devoted to a brief discussion of the ways algorithms with a constant or variable search rate are applied to time-varying plants and various ways of using the specific features of these algorithms to have multidimensional search carried out.

The search for a point of extremum is made more complicated in the case when the coordinates of this point and the function f vary with time, because measurement of the gradient components (or signs of some gradient projections) is hindered. Let us try to use the algorithm (12.3) to optimize a time-varying plant described by the equation

$$y = f(x, t) \tag{12.43}$$

assuming that at any time this function has a singular minimum in the point x^*, y^* and the value of $\partial f/\partial t$ is constrained with any x and t. It is necessary to develop a system which would make the output value equal to a time-varying extremal value. The rate of change of y^* does not exceed the maximal value of $\partial f/\partial t^*$. The minimum is sought by using a sliding mode during which the output y tracks the setpoint $g(t)$ which monotonically decreases at a rate of ρ. For a coordinate g (or y which is equal to it) "to be able to catch up" on the extremum point which changes its position, the following condition should evidently hold

$$\rho > \left| \frac{df}{dt} \right| \tag{12.44}$$

---

* Indeed, $\dot{y}^* = \dfrac{\partial f(x^*, t)}{\partial x^*}\ \dot{x}^* + \dfrac{\partial f(x^*, t)}{\partial t}$, or, with $\dfrac{\partial f}{\partial x^*} = 0$ we have $\dot{y}^* = \dfrac{\partial (x^*, t)}{\partial t}$.

Now let us write the conditions for a sliding mode in which such pursuit can take place. Use the equation for the difference $\varepsilon = g - y$ in which, unlike (12.6), the time-varying response (12.43) should be recognized:

$$\dot{\varepsilon} = -\rho - \frac{\partial f}{\partial x} A \operatorname{sign}(s_1 s_2) - \frac{\partial f}{\partial t} \tag{12.45}$$

The latter equation leads to a condition, similar to (12.5), for a sliding mode to exist in the case of an algorithm with a constant search rate

$$A\left|\frac{\partial f}{\partial x}\right| > \left|\rho + \frac{\partial f}{\partial t}\right| \tag{12.46}$$

For the algorithm (12.19) with a variable rate a disturbance of the sliding mode makes ρ vanish; therefore, its existence condition by virtue of (12.45) is

$$u_0\left|\frac{\partial f}{\partial x}\right| > \left|\frac{\partial f}{\partial t}\right| \tag{12.47}$$

The inequalities (12.46) and (12.47) can be used to estimate the accuracy of search for the extremum of the optimization algorithms discussed here in the case of a time-varying plant. By increasing the coefficients A and u_0 the domain where a sliding mode ceases can be reduced and no motion to the extremum can be insured.

In conclusion let us note those possibilities of designing multidimensional search systems which arise when the average value of the control, u_{av}, is used. As has been shown above, with the search direction fixed and y approaching its directional extremum u_{av} tends to either of its extreme values, u_0 or $-u_0$. This fact can be used for continuous change of the search direction, for instance, in the following way

$$\dot{k} = \gamma(u_{av}, k, t)$$

where the vector k gives the search direction; γ is a vector dependent on u_{av} in such a way that with the absolute values of u_{av} near u_0 the rate of change of k increases and with those values approaching zero it decreases. Consequently, a trend to change the search direction when approaching the direc-

tional extremum will be observed in the system and the motion goes mostly along the near-gradient directions.*

The direction can be changed also randomly by changing u_{av}. For instance, when the inequality (12.29) starts to hold in each channel, the parameters k_i of the vector k are selected by some random law. In a system where a one-dimensional deterministic problem is solved at each step motion to an extremum evidently occurs. An important specific feature of this way of search is that the system should incorporate a unit which always solves a uni-dimensional problem no matter what the dimensionality of the overall problem is and elements changing the direction in each channel also implement a function of one variable (or change k_i as a function of u_{av}) and operate independently of each other.

Finally, the method of one-dimensional optimization with a variable rate if the setpoint, described in this chapter, can be used in the design of a two-level optimization system which permits a gradient search**. The second optimization level minimizes the function

$$\varphi(k) = \frac{1}{2} k^T k + \lambda \frac{1}{|u_{av}|} \quad (\lambda = \text{const})$$

As shown in Sec. 4, $|u_{av}|$ is found from the relation

$$|u_{av}| = \frac{\rho_0 u_0}{\rho_0 + u_0 |\text{grad} f \cdot k|}$$

Therefore, the extremum of the function $\varphi(k)$ is attained in the point $k^0 = -\frac{\lambda}{\rho_0} \text{sign}(\text{grad} f \cdot k) \text{grad} f$; in other words, the direction thus found is the same as that of the gradient of the function $f(x)$. The optimization rate of the second level, which is realized, for instance, by coordinates should be much higher than that in the first main level. This is usually feasible because no constraints are imposed on the rate of change of components of k in the controller.

---

* The functions γ should be selected so that the components of the vector k are bounded, e.g. by the functions of the form $\sin \omega t$ where the parameter ω increases with $|u_{av}|$ approaching u_0.

** The two-level optimization principle was proposed by S.K. Korovin and reported to the Fifth IFAC Congress in 1972.

Chapter XIII

IDENTIFICATION OF DYNAMIC PLANTS

Sec. 1. Statement of the Problem and Equations of a Model with Variable Structure

In many cases the plant parameters have to be determined before the controller is designed. This also is true of plants with time-varying parameters which are to be controlled by adaptive hardware which improves the system dynamics with variations of the plant responses.

In this chapter the differential equations of the plant will be restored by using variable structure models and by the deliberate introduction of motions in sliding mode into the "plant-model" dynamic system*.

It is assumed that the system of functions $\varphi_j(x, t)$ $(j = 1, \ldots, N)$, which are the components of the vector $\varphi(x, t)$ is known and so the right-hand sides of differential equations of the plant can be expanded into finite series. Then the identification of a dynamic plant described by the equations

$$\dot{x} = A\varphi(x, t), \quad x^T = x_1, \ldots, x_n \tag{13.1}$$

reduces to restoration of the constant matrix $A = \| a_{ij} \|$ $(i = 1, \ldots, n; j = 1, \ldots, N)$ of the coefficients of this expansion. It is assumed that on any solution of $x(t)$ the functions $\varphi_j(x(t), t)$ $(j = 1, \ldots, N)$ are linearly independent everywhere except a set of points of zero measure. A particular case is restoration of the matrix $A = \| a_{ij} \|$ of the system of differential equations

$$\dot{x}_i = \sum_{i=1}^{n} a_{ij} x_j \quad (i = 1, \ldots, n) \tag{13.2}$$

---

* This Chapter describes the results of ref. [68] and in the paper by A. D. Braslavsky, S. K. Korovin, N. Ye. Kostyleva, A. M. Shubladze and V. I. Utkin presented to the Fifth IFAC Congress in 1972.

In any case it is required to determine the matrix $A = \| a_{ij} \|$ on the knowledge of only the curve of $x(t)$ over a finite time interval. It will be assumed henceforth that the range of possible values of a_{ij} is constrained and known.

A similar problem was studied earlier for linear equations (13.2), (see e.g. Ref. [22]) or for a "Lurie type" system which differs from the linear system (13.2) in that it has a nonlinear function of one argument which is introduced additively. This argument may be any of x_i or their linear combination [95]. References [22, 95] assumed that the initial data are a set of simultaneous measurements of x_i and $\dot{x}_i$. The values of $\dot{x}_i$ indicate the values of the right-hand sides of equations (13.2) and the problem is reduced to a common problem of restoring a linear function on the knowledge of its values with the set of arguments fixed. There are numerous algorithms for solution of problems of this kind. It is difficult to apply the algorithms to restoration of the operator (13.2) because the convergence of the algorithm should be proved and this requires some assumptions on selection of solutions in the course of which x_i and $\dot{x}_i$ are measured simultaneously. There is always a subset of solutions which do not satisfy the independence condition and even if this subset is of zero measure the case where the entire solution is in this set or the selected points are there should be avoided. Usually in proving the convergence of algorithms the scatter of initial data is assumed random and it is proved that the algorithms converge in some probabilistic sense.

To solve this problem for the system (13.1) let us develop a model described by equations of the (13.1) type but the coefficients of these equations are selected as discontinuous functions. Let us also change the structure of the model so that the plant and the model regarded as one system always start to operate in sliding modes in which the processes both in the plant and in the model coincide. Because both have a similar structure of motion equations and their outputs are the same, the average values of discontinuous coefficients can be used to adjudge the unknown parameters of the plant. Recall that the average value of the control is equal to that of the equivalent control and this value can be measured easily by the first-order filter with a time constant small enough, Sec. 6, Ch. II.

Thus, besides the system (13.1), we see the model equation

$$\dot{y} = u \tag{13.3}$$

where y and u are n-dimensional model state vectors and controls with components $(y_1, \ldots, y_n)$ and $(u_1, \ldots, u_n)$ respectively. Make up a control vector in the form of a piecewise-linear function of components of the vector φ

$$u_i = \sum_{j=1}^{N} b_{ij}\, \varphi_j(x,\ t) + \left[\sum_{j=1}^{N} d_{ij} \mid \varphi_j(x,\ t) \mid \right] u_i^* \qquad (d_{ij} = \text{const}) \tag{13.4}$$

$$u_i^* = \begin{cases} 1 \text{ with } s_i > 0 \\ -1 \text{ with } s_i < 0 \end{cases} \quad (i = 1, \ldots, n)$$

and the functions s_i defining the discontinuity surfaces are equal to differences between the associated coordinates of the plants and the model

$$s_i = x_i - y_i \tag{13.5}$$

Computing $\dot{s}_i$ from (13.1), (13.3)-(13.5)

$$\dot{s}_i = \sum_{j=1}^{N} [(a_{ij} - b_{ij})\, \varphi_j - d_{ij} \mid \varphi_j \mid u_i^*]$$

reveals that the condition (1.9) of a sliding mode is met on each surface $s_i = 0$ if

$$d_{ij} > \max_{a_{ij}} \mid a_{ij} - b_{ij} \mid \tag{13.6}$$

The conditions (13.6) are simultaneously reaching conditions under sufficiently general assumptions on the functions φ_j. This implies that in our "plant-model" system a motion in sliding mode starts at a certain time along the intersection of all discontinuity surfaces and all the differences between the plant and model outputs are identically equal to zero.

To determine sliding equations by the equivalent control method, Ch. II, u_i^* in the model equation should be replaced by the functions $u_{i\,\text{eq}}^*$ which are the solutions of the equations $\dot{s}_i = 0$ $(i = 1, \ldots, n)$ with respect to controls. Hence, it follows

that the values of $\dot{s}_i$ with $u_i^* = u_{i\,\text{eq}}^*$ are identically equal to zero, or

$$\sum_{j=1}^{N} l_{ij}\,\varphi_j(x,\ t) = \varepsilon_i^0\ (i = 1,\ \ldots,\ n) \tag{13.7}$$

where

$$l_{ij} = a_{ij} - b_{ij},\ \varepsilon_i^0 = \sum_{j=1}^{N} d_{ij}\,u_{i\,\text{eq}}^*\,|\,\varphi_j(x,\ t)\,| \tag{13.8}$$

The components of $u_{i\,\text{eq}}^*$ are equal to the average values of u_i^* and can be obtained as the outputs of filters with a small time constant if u_i are the inputs of these filters. (Selection of parameters and measurement errors was discussed in Sec. 6, Ch. II.)

Consider now the following two cases:

(1) The signal $u_{i\,\text{eq}}^*$ observed at the output of the i-th filter is equal to a constant value.

(2) The signal $u_{i\,\text{eq}}^*$ varies with time.

Case (1). Take up a time interval over which $\varphi_j(x,\ t)$ does not change sign and the values of $d_{ij}u_{i\,\text{eq}}^*$ sign $\varphi_j(x,\ t)$ remain constant. By virtue of the independence of the functions $\varphi_j(x,\ t)$ the equality (13.7) gives immediately

$$a_{ij} = b_{ij} + d_{ij}u_{i\,\text{eq}}^*\ \text{sign}\ \varphi_j(x,\ t) \tag{13.9}$$

where $u_{i\,\text{eq}}^*$ is a signal readily observed at the filter output. Substituting this value of $u_{i\,\text{eq}}^*$ and the values of b_{ij} and d_{ij} associated with different j's into (13.9) leads to restoration of the i-th row of the matrix A.

In a particular case when only one element of the matrix A, for instance a_{11}, is unknown and all other elements are specified numbers, the parameters of the model (13.4) are selected such that all d_{ij} except d_{11} are zero, all b_{ij} except b_{11} are equal to a_{ij} and the coefficients b_{11} and d_{11} are selected such that they satisfy the conditions (13.6) for the existence of a sliding mode. Then from (13.7) and (13.8) it follows that all $l_{ij} = 0$ except l_{11}. Moreover, since the function $\varphi_1(x,\ t) \not\equiv 0$, then

$$a_{11} = b_{11} + d_{11}u_{1\,\text{av}}^*\ \text{sign}\ \varphi_1(x,\ t)$$

or the unknown coefficient a_{11} is restored by using this method without any searching procedure.

Case (2). In this case $u_{i\,\mathrm{eq}}^{*}$ is a time function and therefore the quantities $d_{ij}u_{i\,\mathrm{eq}}^{*}$ sign $\varphi_j(x, t)$ are the time functions. Under these conditions, it does not follow any longer from (13.7) that all coefficients $l_{ij} - d_{ij}u_{i\,\mathrm{eq}}^{*} \times$ sign $\varphi_j(x, t)$ are zero and that formulas (13.9) cannot be used to determine the coefficients a_{ij}. Note, however, that there always exists a set of numbers b_{ij} and d_{ij} for which it will be case (1) rather than case (2) at whatever will be matrix A. Indeed, the value of $u_{i\,\mathrm{eq}}^{*}$ which is the solution of the equation $\dot{s}_i = 0$ for u_i^{*} is of the form

$$u_{i\,\mathrm{eq}}^{*} = \frac{\sum_{j=1}^{N} (a_{ij} - b_{ij})\,\varphi_j(x, t)}{\sum_{j=1}^{N} (d_{ij}\ \mathrm{sign}\ \varphi_j(x, t))\,\varphi_j(x, t)} \tag{13.10}$$

If the coefficients d_{ij} are selected such that they are proportional to the numbers $a_{ij} - b_{ij}$ with the same proportionality factor and if a part of the process is regarded with which $\varphi_i(x, t)$ do not change sign, it is certain that $u_{i\,\mathrm{eq}}^{*} = \mathrm{const}$ in this part. In this way the selection of b_{ij} and d_{ij} cannot be readily computed because the coefficients a_{ij} are unknown. This reasoning, however, shows that the coefficients b_{ij} and d_{ij} with which $u_{i\,\mathrm{eq}}^{*}$ is constant do exist. It is necessary to find them.

In this technique the methods of variable structure systems are used to restore the derivative $\dot{x}$ also. But unlike the references just mentioned, the matrix A is restored not by using discrete one-shot measurements of the vectors x and $\dot{x}$ with their subsequent processing in some computing procedure but in a continuous process, without discrete measurements. For this reason the technique proposed is insensitive to the fact that in the course of the process its trajectories in the state space "pierce" the zero measure subset where the functions $\varphi_j(x, t)$ are no longer independent of the solutions to the system (13.1) and the probability for a solution which completely belongs to this subset with arbitrary selection of initial data is zero. Therefore, there is no need in proving the convergence of the restoration process. Note also that the method proposed also is essentially applicable in the case where the system (13.1) is unstable (e.g. a system (13.2) with a non-Hur-

witz matrix A). The only requirement is that the process rate be convenient for observation and measurement over a certain period long enough for the "plant-model" system to enter a sliding mode and, if necessary, to organize a searching process.

Sec. 2. The Procedure of Model Parameter Adjustment

Let us describe one of the procedures of search for model parameters such that all values of $u_{i\,\mathrm{eq}}^{*}$ are constant and therefore the desired plant parameters are found from the relations (13.9).

Complete equation (13.8) with analogous equations on whose left-hand sides instead of $\varphi_j(x, t)$ stand the functions $\varphi_j^k(x, t) = L^k\{\varphi_j(x, t)\}$, i.e. functions obtained from k-tuple application of some linear operator L to $\varphi_i(x, t)$. In this case the right-hand sides are, generally speaking, time functions.

Now we introduce the notation

$$\sum_{j=1}^{N} l_{ij}\,\varphi_j^k(x, t) = \varepsilon_i^k(t) \quad (k = 0, \ldots, N-1) \tag{13.11}$$

(Note that the functions ε_i^k are not equal to $L^k\{\varepsilon_i^0\}$ because in the course of the search for model parameters the coefficients l_{ij} vary in time and then the left-hand side of equation (13.11) does not result from k-tuple application of the operator L to the linear combination $\sum_{j=1}^{N} l_{ij}\,\varphi_j$ which is equal to ε_i^0 by virtue of (13.7).)

Now let us make sure that all functions ε_i^k can be measured directly although the plant parameters a_{ij} on which the coefficients l_{ij} in (13.11) depend are unknown. From the conditions $\dot{s}_i \equiv 0$ with $u_i^* = u_{i\,\mathrm{eq}}^*$ it follows that

$$\sum_{j=1}^{N} a_{ij}\,\varphi_j(x, t) = \sum_{j=1}^{N} b_{ij}\,\varphi_j(x, t) + \left(\sum_{j=1}^{N} d_{ij}\,|\,\varphi_j(x, t)\,|\right) u_{i\,\mathrm{eq}}^{*} \tag{13.12}$$

Applying the linear operator L^k to the right- and left-hand sides of equation (13.12) gives

$$\sum_{j=1}^{N} a_{ij}\,\varphi_j^k(x,\ t) = L^k\left\{\sum_{j=1}^{N} b_{ij}\,\varphi_j(x,\ t) + \right.$$

$$\left. + \left(\sum_{j=1}^{N} d_{ij} \mid \varphi_j(x,\ t) \mid\right) u_{i\,\mathrm{eq}}^{*}\right\} \tag{13.13}$$

The relations (13.13) make it possible to rearrange equations (13. 11)

$$L^k\left\{\sum_{j=1}^{N} b_{ij}\,\varphi_j(x,\ t) + \left(\sum_{j=1}^{N} d_{ij} \mid \varphi_j(x,\ t) \mid\right) u_{i\,\mathrm{eq}}^{*}\right\} -$$

$$- \sum_{j=1}^{N} b_{ij}\,\varphi_j^k(x,\ t) = \varepsilon_i^k \tag{13.14}$$

As follows from (13.14), all functions in the left-hand side are known and so the values of ε_i^k can be computed.

The linear operator L is selected such that the condition

$$\det \left\| \varphi_j^k(x,\ t) \right| \neq 0\ (j = 1,\ \ldots,\ N;\ k = 0,\ \ldots,\ N-1) \tag{13.15}$$

holds for the functions $\varphi_j^k\ (x,\ t)$. Take up now the behaviour of the auxiliary functions $v_i = \frac{1}{2}\sum_{j=1}^{N} l_{ij}^2$ if the coefficients b_{ij} of the model vary by the law

$$\dot{b}_{ij} = c\sum_{k=0}^{N-1} \varepsilon_i^k\ \varphi_j^k(x,\ t)\ (c = \mathrm{const},\ c > 0) \tag{13.16}$$

Let us write time derivatives for the functions v_i:

$$\dot{v}_i = -\sum_{j=1}^{N} l_{ij}\,\dot{b}_{ij}$$

or, with (13.16) recognized

$$\dot{v}_i = -c\sum_{j=1}^{N} l_{ij}\sum_{k=0}^{N-1} \varepsilon_i^k\,\varphi_j^k(x,\ t) \tag{13.17}$$

By virtue of (13.11) equation (13.17) is reduced to the form

$$\dot{v}_i = -c\sum_{k=0}^{N-1} (\varepsilon_i^k)^2$$

which implies that the functions v_i have lower bounds ($v_i \geqslant 0$) and monotonically decrease with all ε_i^k which are not simultaneously equal to zero. The process ceases when all ε_i^k vanish. From equations (13.11) and the condition (13.15)*, it follows that

$$\lim_{t \to \infty} l_{ij} = 0$$

or

$$\lim_{t \to \infty} b_{ij} = a_{ij}$$

Consequently, the searching procedure (13.16) for all operators of the type (13.15) leads to all parameters of the plant to be identified.

Sec. 3. Selection of Linear Operators. Examples

The above procedure of plant parameters determination is also legitimate for linear operators of the type (13.15). A few examples of such operators follow.

Example 1. Let the plant be a linear system (13.2), or $\varphi_j = x_j$; A is a square $n \times n$ matrix with real and distinct eigenvalues. Let us show that for the linear operator L of the "delay element" type the condition (13.15) is met.

In our case the vector x is of the form

$$x = D\Phi(t)\, c \tag{13.18}$$

where D is a matrix whose columns are eigenvectors of the matrix A; $\Phi(t)$ is a diagonal matrix with elements $e^{\alpha_i t}$, α_i ($i = 1, \ldots, n$) are eigenvalues of the matrix A; c is a column vector with components $c_1, \ldots, c_n$ which depends on the initial conditions. For the operator L with delay τ the problem reduces to the proof of the condition

$$\det \| x_j^k(t) \| = \det \| x_j(t - (k-1)\tau) \| \neq 0$$

$$(j, k = 1, \ldots, n) \tag{13.19}$$

---

* The model parameter adjustment is assumed to be much faster than that of processes in the plant and if $\lim_{t \to \infty} \det \| \varphi^k \| = 0$, then $\lim_{t \to \infty} \left(\varepsilon_i^k / \det \| \varphi_j^k \| \right) = 0$.

As follows from (13.18), this determinant is of the form

$$\det \| x_j^k \| = c_1 c_2 \ldots c_n \det \| D \| e^{\sum_{i=1}^{n} \alpha_i} \det \| e^{-\alpha_j (k-1) \tau} \|$$

In compliance with an assumption cited above, the components of the vector x in (13.18) should be linearly independent. Therefore all c_i are nonzero; the matrix D consists of eigenvectors of the matrix A with different eigenvalues, therefore $\det \| D \| \neq 0$; finally, $\det \| e^{-\alpha_j (k-1)\tau} \|$ is a Vandermonde determinant and thus also nonzero. This proves the inequality (13.19).

Example 2. Now take up the application of the "first-order filter" operator L with a time constant T and a gain equal to unity to the functions $x_j(t)$ for a linear system treated in Example 1. Assume that free motions of the filters decay so fast that they can be neglected.

As a result of k-tuple application of the operator L to the vector x in (13.18), we find

$$x^k = D \Phi^k(t) c$$

where $\Phi^k(t)$ is a diagonal matrix with elements $e^{\alpha_j t}/(T\alpha_j + 1)^k$. A determinant analogous to (13.19) and made of components of the vectors x^k ($k = 0, \ldots, n-1$) is presented in the form

$$\det \| x_j^k \| = c_1 c_2 \ldots c_n \det \| D \| e^{\sum_{i=1}^{n} \alpha_i} \det \left\| \frac{1}{(T\alpha_j + 1)^k} \right\|$$

In studying the operator of the type "delay element" in Example 1 all c_i and $\det \| D \|$ were proved to be nonzero. The last multiplier, as in Example 1, is a Vandermonde determinant and thus is also nonzero. This implies that the condition (13.15) under which the search procedure (13.16) leads to plant parameters also holds for an operator L of the "first-order filter" type.

Example 3. Let us show that for systems (13.1) of an arbitrary form the differentiation operator

$$\varphi_j^k = \frac{d^k \varphi_j(x, t)}{dt^k}$$

can act as an operator L.

Let us prove that there are such time intervals over which the condition (13.15) is met. Let us prove this by mathematical induction.

Take up the second-order determinant

$$A_2(t) = \begin{vmatrix} \varphi_1 & \varphi_2 \\ \dot{\varphi}_1 & \dot{\varphi}_2 \end{vmatrix}$$

Assume that $A_2(t) \equiv 0$. Then at each moment its columns are linearly dependent, i.e.

$$\left.\begin{aligned} a_1^*(t)\,\varphi_1 + a_2^*(t)\,\varphi_2 &= 0 \\ a_1^*(t)\,\dot{\varphi}_1 + a_2^*(t)\,\dot{\varphi}_2 &= 0 \end{aligned}\right\} \tag{13.20}$$

The function $a_2^*(t)$ is not identically equal to zero; therefore, there is a time interval over which $a_2^*(t)$ does not vanish and the system (13.20) is represented in the form

$$\left.\begin{aligned} a_1(t)\,\varphi_1 + \varphi_2 &= 0 \\ a_1(t)\,\dot{\varphi}_1 + \dot{\varphi}_2 &= 0 \end{aligned}\right\} \tag{13.21}$$

Differentiation of the first equation in (13.21) and subtraction of the second one from it leads to

$$\dot{a}_1\,\varphi_1 = 0 \tag{13.22}$$

Since $\varphi_i \not\equiv 0$, the relation (13.22) implies that $a_1(t)$ is constant and this does not agree with the condition for linear independence of the functions φ_1 and φ_2. The determinant $A_2(t)$ is thus not identically equal to zero. Now take up a k-th order determinant $A_k = \det \left\| \frac{d^{i-1}\varphi_j}{dt^{i-1}} \right\| (i, j = 1, \ldots, k)$ assuming that the $(k-1)$ st-order determinant $A_{k-1} = \det \left\| \frac{d^{i-1}\varphi_j}{dt^{i-1}} \right\| (i, j = 1, \ldots, k-1)$ is not identically equal to zero.

Assume that the determinant $A_k(t) \equiv 0$, i.e., at each moment of time its columns are linearly dependent. Let the functions $a_1^*(t), \ldots, a_k^*(t)$ be the coefficients of a linear combination of these columns which by analogy with (13.20) is equal to zero. Select a time interval over which $a_k^*(t)$ does not vanish and write for the determinant A_k the equations analogous to (13.21)

$$\sum_{j=1}^{k} a_j(t)\,\frac{d^{i-1}\varphi_j}{dt^{i-1}} = 0 \quad (i = 1, \ldots, k),\ a_k(t) = 1 \tag{13.23}$$

Differentiating each equation in (13.23) and subtracting the preceding one from it gives

$$\sum_{j=1}^{k-1} \dot{a}_j \frac{d_i^{-1}\varphi_j}{dt^{i-1}} = 0 \quad (i = 1, \ldots, k-1) \tag{13.24}$$

Since by our assumption the determinant A_{k-1} is not equal to zero, the system (13.24) just has one trivial solution

$$\dot{a}_i(t) = 0 \text{ or } a_i(t) = \text{const} \quad (i = 1, \ldots, k-1)$$

This conclusion is, however, in disagreement with the condition for linear independence of the functions $\varphi_1, \ldots, \varphi_k$. There are thus time intervals over which the determinant of any order made up of linearly independent functions and their time derivatives is not identically equal to zero. This implies that the differentiation operator can be used in implementing the procedure, Sec. 2, for determining the plant parameters.

REFERENCES

1. Aizerman, M. A., Gantmakher, F. R. O nekotorykh osobennostiakh pereklyuchenii v nelineinykh sistemakh avtomaticheskogo regulirovaniya s kusochno-gladkoi kharakteristikoi nelineinogo elementa (On Certain Specifics of Switchings in Nonlinear Control Systems with a Piecewise-Smooth Characteristic of the Nonlinear Element), *Avtomatika i telemekhanika*, Vol. 28, No. 11, 1957.
2. Andronov, A. A., Vitt, A. A., Khaikin, S. E. Teoriya kolebanii (Theory of Oscillations), Fizmatgiz, Moscow, 1959.
3. Andronov, A. A., Bautin, N. N., Gorelik, G. S. Teoriya nepryamogo regulirovaniya pri uchyote kulonovskogo treniya v chuvstvitel'nom elemente (Theory of Indirect Control with Due Regard for Coulomb Friction in the Sensitive Element), *Avtomatika i telemekhanika*, Vol. 7, No. 1, 1946.
4. Bakakin, A. V., Bermant, M. A., Ezerov, V. B. Primeneniye sistem s peremennoi strukturoi dlya stabilizatsii ob"ekta s izmenyayushchimisya parametrami pri nalichii ogranichenii na peremeshcheniye reguliruyushchego organa (The Use of Variable Structure Systems for Stabilization of a Plant with Variable Parameters in the Presence of Constraints on the Actuator Movement), *Avtomatika i telemekhanika*, Vol. 25, No. 7, 1964.
5. Bakakin, A. V., Gritsenko, M. B., Kostyleva, N. E. Algoritmy upravleniya sistem s peremennoi strukturoi (Control Algorithms for Variable Structure Systems), In "*Variable Structure Systems and Their Application in Problems of Flight Automation*", Nauka, Moscow, 1968.
6. Bakakin, A. V., Utkin, V. I. Ob odnom sposobe opredeleniya oblastei ustoychivogo dvizheniya (On One Way to Determine Domains of Stable Motion), In "*Variable Structure Systems and Their Application in Problems of Flight Automation*", Nauka, Moscow, 1968.
7. Bakakin, A. V., Utkin, V. I. Sistemy s peremennoi strukturoi s zapazdyvaniyem v pereklyuchayushchikh ustroystvakh (Variable Structure Systems with Delay in Switching Devices), In "*Variable Structure Systems and Their Application in Problems of Flight Automation*", Nauka, Moscow, 1968.
8. Bakakin, A. V., Utkin V. I. Ob usloviyakh ustoichivosti skol'zyashchikh dvizhenii v sistemakh s peremennoi strukturoi (On Conditions

of Stability of Sliding Motions in Variable Structure Systems), In "*Analysis and Design of Control Systems*", Nauka, Moscow, 1968.
9. Barbashin, E. A. Vvedeniye v teoriyu ustoychivosti (Introduction into Stability Theory), Nauka, Moscow, 1967.
10. Barbashin, E. A., Gerashchenko, E. I. O stabilizatsii sistem regulirovaniya (On Stabilization of Control Systems), *PMM*, Vol. 28, Issue 4, 1964.
11. Barbashin, E. A., Gerashchenko, E. I. O forsirovanii skol'zyashchikh rezhimov v sistemakh avtomaticheskogo regulirovaniya (On Introduction of Sliding Modes into Control Systems), *Differential Equations*, Vol. 1, No. 1, 1965.
12. Barbashin, E. A., Gerashchenko, E. I. Ob odnom printsipe postroeniya sistem stabilizatsii (On One Design Principle for Stabilization Systems), *Avtomatika i telemekhanika*, Vol. 26, No. 6, 1965.
13. Barbashin, E. A., Pechorin, I. N., Eidinov, R. M. Primenenie sistem avtomaticheskogo regulirovaniya s peremennoi strukturoi dlya odnogo klassa lineinykh staticheskikh ob''ektov (The Application of Variable Structure Control Systems to One Class of Linear Static Plants), *Avtomatika i telemekhanika*, Vol. 24, No. 1, 1963.
14. Barbashin, E. A., Tabueva, V. A. Ob odnom sposobe stabilizatsii sistem regulirovaniya tret'ego poryadka s bol'shim koeffitsientom usileniya (On One Way to Stabilize Third-Order High Gain Control Systems), I, *Avtomatika i telemekhanika*, Vol. 23, No. 10, 1962.
15. Barbashin, E. A., Tabueva, V. A. Ob odnom sposobe stabilizatsii sistem regulirovaniya tret'ego poryadka s bol'shim koeffitsientom usileniya (On One Way to Stabilize Third-Order High Gain Control Systems), II, *Avtomatika i telemekhanika*, Vol. 24, No. 5, 1963.
16. Barbashin, E. A., Tabueva, V. A. Eidinov, R. M. Ob ustoichivosti odnoy sistemy regulirovaniya s peremennoy strukturoi pri narushenii uslovii skol'zheniya (On Stability of One Variable Structure Control System with the Sliding Conditions Disturbed), *Avtomatika i telemekhanika*, Vol. 24, No. 7, 1963.
17. Bermant, M. A., Emel'yanov, S. V. Ob odnom sposobe upravleniya nekotorym klassom ob''ektov s izmenyayushchimisya parametrami (On One Way to Control a Class of Plants with Variable Parameters), *Avtomatika i telemekhanika*, Vol. 24, No. 5, 1963.
18. Bermant, M. A., Emel'yanov, S. V. Ob ustoychivosti odnogo klassa sistem avtomaticheskogo upravleniya s peremennymi parametrami (On Stability of One Class of Control Systems with Variable Parameters), Izv. AN SSSR, *Tekhnicheskaya kibernetika*, No. 6, 1964.
19. Bermant, M. A., Emel'yanov, S. V., Taran, V. A. Dvizheniye sistem s peremennoi strukturoi v skol'zyashchem rezhime (Motion of Variable Structure Systems in Sliding Mode), *Avtomatika i telemekhanika*, Vol. 26, No. 8, 1965.
20. Bermant, M. A., Utkin, V. I. Usloviya ustoichivosti svobodnykh kolebanii sistem s peremennoi strukturoi dlya upravleniya ob''ektami s izmenyayushchimisya parametrami (Conditions for Stability of Free Oscillations in Variable Structure Systems for Control of Plants with Variable Parameters), In "*Variable Structure Systems and Their Application in Problems of Flight Automation*", Nauka, Moscow, 1968.
21. Bernshtein, S. I. Teoriya vibratsionnykh regulyatorov elektricheskikh mashin (Theory of Vibrational Controllers of Electrical Machinery),

Proceedings of the Second All-Union Conference on Control Theory, Vol. 1, Izd-vo AN SSSR, Moscow, 1955.
22. Braverman, E. M. Vosstanovleniye differentsial'nogo uravneniya ob''ekta v protsesse yego normal'noi ekspluatatsii (Restoration of a Plant's Differential Equation in the Process of Its Normal Functioning) *Avtomatika i telemekhanika*, Vol. 37, No. 3, 1966.
23. Bromberg, P. V. Matrichnye metody v teorii releinogo i impul'snogo regulirovaniya (Matrix Methods in Theory of Relay and Sampled-Data Control), Nauka, Moscow, 1967.
24. Gamkrelidze, R. V. O skol'zyashchikh optimal'nykh rezhimakh (On Optimal Sliding Modes), DAN SSSR, Vol. 143, No. 6, 1962.
25. Gerashchenko, E. I. Ob ustoichivosti dvizheniya v giperploskostyakh skol'zheniya dlya nekotorykh sistem avtomaticheskogo regulirovaniya s peremennoi strukturoi (On Stability of Motion in Sliding Hyperplanes for Certain Variable Structure Control Systems), Izv. AN SSSR, *Tekhnicheskaya kibernetika*, No. 4, 1963.
26. Gerashchenko, E. I. O stepeni ustoichivosti nelineinykh sistem v skol'zyashchem rezhime (On Degree of Stability of Nonlinear Systems in Sliding Mode), Izv. AN SSSR, *Tekhnicheskaya kibernetika*, No. 2, 1964.
27. Gerashchenko, E. I., Kiselyov, L. V. Ob ustoichivosti odnoi sistemy regulirovaniya s forsirovannym skol'zyashchim rezhimom. Differentsial'nye uravneniya (On Stability of One Control System with a Deliberately Introduced Sliding Mode), *Differential Equations*, Vol. 1, No. 12, 1965.
28. Demidovich, B. P. *Lektsii po matematicheskoi teorii ustoichivosti* (Lectures on the Mathematical Theory of Stability), Nauka, Moscow, 1967.
29. Dolgolenko, Yu. V. Skol'zyashchie rezhimy v releinykh sistemakh nepryamogo regulirovaniya (Sliding Modes in Relay Systems of Indirect Control), *Proceedings of the Second All-Union Conference on Theory of Automatic Control*, Vol. 1, Izd. AN SSSR, Moscow, 1965.
30. Dudin, E. B. Usloviya pereklyucheniya v kombinirovannykh sledyashchikh sistemakh peremennoi struktury (Switching Conditions in Combined Variable Structure Tracking Systems), Izv. AN SSSR, *Tekhnicheskaya kibernetika*, No. 2, 1964.
31. Dudin, E. B., Ulanov, G. M. Kombinirovannye sistemy avtomaticheskogo upravleniya s peremennoi strukturoi (Combined Variable Structure Control Systems), *Proceedings of the International Conference on Multidimensional and Discrete Control Systems*, Section B., Prague, 1965.
32. Dudnikov, E. G., Vvedenie v teoriyu nepryamogo regulirovaniya s postoyannoi skorost'yu zakrytiya (An Introduction into Theory of Indirect Control with a Constant Rate of Response), *Avtomatika i telemekhanika*, Vol. 1, No. 6, 1939.
33. Ezerov, V. B., Utkin, V. I. Fil'tr s peremennoi strukturoi kak analog forsiruyushchego zvena (A Variable Structure Filter as an Analog of a Forcing Element), In "*Variable Structure Systems and Their Application in Problems of Flight Automation*", Nauka, Moscow, 1968.
34. Emel'yanov, S. V. Sistemy avtomaticheskogo upravleniya s peremennoi strukturoi (Variable Structure Control Systems), Nauka, Moscow, 1967.

35. Emel'yanov, S. V. Sposob polucheniya slozhnykh zakonov regulirovaniya s ispol'zovaniem lish signala oshibki ili reguliruemoi koordinaty i yeyo pervoi proizvodnoi (A Way to Obtain Complex Laws of Control by Using Only the Error Signal or the Controlled Coordinate and Its First Derivative), *Avtomatika i telemekhanika*, Vol. 18, No. 10, 1957.
36. Emel'yanov, S. V. Primenenie nelineinykh korrektiruyushchikh ustroistv tipa "klyuch" dlya uluchsheniya kachestva sistem avtomaticheskogo regulirovaniya vtorogo poryadka (Using Nonlinear Correcting Devices of the "Key" Type for Improvement of Performance of Second-Order Control Systems), *Avtomatika i telemekhanika*, Vol. 20, No. 7, 1959.
37. Emel'yanov, S. V. Regulirovanie ob''ekta pervogo poryadka s zapazdyvaniem astaticheskim regulyatorom s nelineynoi korrektsiei (Control of a First-Order Plant with Delay by an Astatic Controller with Nonlinear Correction), *Avtomatika i telemekhanika*, Vol. 20, No. 8, 1959.
38. Emel'yanov, S. V. Regulirovanie neytral'nogo ob''ekta astaticheskim regulyatorom s nelineinoi korrektsiyei (Control of a Neutral Plant by an Astatic Controller with Nonlinear Correction), In "*Certain Methods of Calculating Control Systems and Their Elements*", Issue 112, Sudpromgiz, Moscow, 1959.
39. Emel'yanov, S. V. O vysokokachestvennom upravlenii nekotorymi nelineinymi ob''ektami s peremennymi parametrami (On High Performance Control of Certain Nonlinear Plants with Variable Parameters), Izv. AN SSSR, *Energetika i avtomatika*, No. 4, 1962.
40. Emel'yanov, S. V., Bermant, M. A. K voprosu o postroyenii vysokokachestvennykh sistem avtomaticheskogo upravleniya objektami s izmenyayushchimisya parametrami (On Design of High Performance Control Systems for Plants with Variable Parameters), DAN SSSR, Vol. 145, No. 4, 1962.
41. Emel'yanov, S. V., Bermant, M. A., Utkin, V. I. Postroyenie sistem avtomaticheskogo regulirovaniya (SAR) s peremennoi strukturoi, malochuvstvitel'nykh k bystromu izmeneniyu v shirokikh predelakh ob''ekta regulirovaniya (Design of Variable Structure Control Systems Not Very Sensitive to Fast Wide-Range Changes in the Plant), in "*Self-Adjusting Systems*", Nauka, Moscow, 1965.
42. Emel'yanov, S. V., Taran, V. A., Kostyleva, N. E., Bermant, M. A., Utkin, V. I. Printsipy postroeniya sistem s peremennoi strukturoi dlya upravleniya nestatsionarnymi ob''ektami (Design Principles of Variable Structure Systems for Control of Nonstationary Plants), *Proceedings of the Third IFAC Congress*, London, 1966, Nauka, 1971.
43. Emel'yanov, S. V., Bermant, M. A., Kostyleva, N. E., Utkin, V. I. Ob odnom sposobe kompensatsii parametricheskikh vozmushchenii. Teoriya samonastraivayushchikhsya sistem (On One Way to Compensate Parametric Disturbances. Theory of Self-Adjusting Systems), Nauka, Moscow, 1969.
44. Emel'yanov, S. V. Kostyleva, N. E., Utkin, V. I. Ob odnom sposobe postroyeniya invariantnykh SAR s peremennoi strukturoi (On One Way to Construct Invariant Control Variable Structure Systems), In "*Theory of Multivariable Control*", Nauka, Moscow, 1966.
45. Emel'yanov, S. V., Utkin, V. I., Taran, V. A., Kostyleva, N. E., Shubladze, A. M., Ezerov, V. B., Dubrovskii, E. N. Teoriya sistem s pere-

mennoi strukturoi (Theory of Variable Structure Systems), Nauka, Moscow, 1970.
46. Emel'yanov, S. V., Kostyleva, N. E. O nekotorykh osobennostyakh dvizheniya v SAR s peremennoi strukturoi, obladayushchikh razryvnoi funktsiei perekliucheniya (On Some Specifics of Motion of Variable Structure Control Systems with a Discontinuous Switching Function), DAN SSSR, Vol. 153, No. 4, 1963.
47. Emel'yanov, S. V., Kostyleva, N. E. Sintez sistem avtomaticheskogo regulirovaniya s peremennoi strukturoi, obladayushchikh razryvnoi funktsiei pereklyucheniya (Design of Variable Structure Control Systems with a Discontinuous Switching Function), Izv. AN SSSR, *Tekhnicheskaya kibernetika*, No. 1, 1964.
48. Emel'yanov, S. V., Taran, V. A. Ob odnom klasse SAR s peremennoi strukturoi (On One Class of Variable Structure Control Systems), Izv. AN SSSR, *Energetika i avtomatika*, No. 3, 1962.
49. Emel'yanov, S. V., Taran, V. A. K voprosu ispol'zovaniya inertsionnykh zven'ev dlya postroyeniya odnogo klassa sistem avtomaticheskogo regulirovaniya s peremennoi strukturoi (On the Use of Delay Elements for Construction of One Class of Variable Structure Control Systems), I, *Avtomatika i telemekhanika*, Vol. 24, No. 1, 1963.
50. Emel'yanov, S. V., Taran, V. A. K voprosu ispol'zovaniya inertsionnykh zven'ev dlya postroeniya odnogo klassa sistem avtomaticheskogo regulirovaniya s peremennoi strukturoi (On the Use of Delay Elements for Construction of One Class of Variable Structure Control Systems), II, *Avtomatika i telemekhanika*, Vol. 24, No. 2, 1963.
51. Emel'yanov, S. V., Taran V. A. O sposobe stabilizatsii sistem avtomaticheskogo regulirovaniya s peremennoi strukturoi bez ispol'zovaniya vozdeistvii po proizvodnym (On a Method for Stabilizing Variable Structure Control Systems without Control Signals in Response to Derivatives), Izv. AN SSSR, *Tekhnicheskaya kibernetika*, No. 1, 1963.
52. Emel'yanov, S. V., Taran, V. A. K voprosu postroeniya sistem avtomaticheskogo regulirovaniya s peremennoi strukturoi dlya lineynykh ob''ektov (On Design of Variable Structure Control Systems for Linear Plants), Izv. AN SSSR, *Tekhnicheskaya kibernetika*, No. 2, 1963.
53. Emel'yanov, S. V., Taran, V. A. Dopolnenie k stat'ye E. I. Gerashchenko (Addenda to the Article by E. I. Gerashchenko), Izv. AN SSSR, *Tekhnicheskaya kibernetika*, No. 4, 1963.
54. Emel'yanov, S. V., Taran, V. A. Primenenie kommutiruemykh fazosdvigayushchikh filtrov v sisteme avtomaticheskogo regulirovaniya s peremennoi strukturoi (The Use of Commutating Phase-Shift Filters in a Variable Structure Control System), Izv. AN SSSR, *Tekhnicheskaya kibernetika*, No. 5, 1963.
55. Emel'yanov, S. V., Taran, V. A. Stabilizatsiya SAR s peremennoi strukturoi pri pomoshchi inertsionnykh zven'ev s izmenyaemoi postoyannoi vremeni (Stabilizing Variable Structure Control Systems by Using Delay Elements with a Variable Time Constant), *Avtomatika i telemekhanika*, Vol. 25, No. 6, 1964.
56. Emel'yanov, S. V., Utkin, V. I. Primenenie sistem avtomaticheskogo regulirovaniya s peremennoi strukturoi dlya upravleniya ob''ektami, parametry kotorykh izmenyayutsya v shirokikh predelakh (The Use

of Variable Structure Control Systems for Control of Plants Whose Parameters Vary in a Wide Range), DAN SSSR, Vol. 152, No. 2, 1963.
57. Emel'yanov, S. V., Utkin, V. I. Ob ustoichivosti dvizheniya odnogo klassa SAR s peremennoi strukturoi (On Stability of Motion of One Class of Variable Structure Control Systems), Izv. AN SSSR, *Tekhnicheskaya kibernetika*, No. 2, 1964.
58. Emel'yanov, S. V., Utkin, V. I., Taran, V. A. O popadanii izobrazhayushchei tochki na ploskost' skol'zheniya v sistemakh s peremennoi strukturoi tret'ego poryadka (On a Describing Point Reaching a Sliding Plane in Third-Order Variable Structure Systems), Izv. AN SSSR, *Tekhnicheskaya kibernetika*, No. 3, 1965.
59. Emel'yanov, S. V., Fedotova, A. I. Sozdanie astatizma v sledyashchikh sistemakh s peremennoi strukturoi (Obtaining Astatism in Variable Structure Tracking Systems), *Avtomatika i telemekhanika*, Vol. 23, No. 10, 1962.
60. Yemel'yanov, S. V., Fedotova, A. I. Vosproizvedeniye upravlyayushchego vozdeistviya astaticheskimi sledyashchimi sistemami s peremennoi strukturoi (Reproduction of the Control Signal by Astatic Variable Structure Tracking Systems), *Avtomatika i telemekhanika*, Vol. 26, No. 1, 1965.
61. Emel'yanov, S. V., Fedotova, A. I. Ob astaticheskom vosproizvedenii transtsendentnykh funktsii sledyashchimi sistemami s peremennoi strukturoi (On Astatic Reproduction of Transcendental Functions by Variable Structure Tracking Systems), *Avtomatika i telemekhanika*, Vol. 26, No. 3, 1965.
62. Itkis, Yu. F. K voprosu ob ustoichivosti dvizheniya sistemy s peremennoi strukturoi dlya upravleniya ob''ektami s izmenyayushchimisya parametrami. In "*Sistemy s peremennoi strukturoi i ikh primenenie v zadachakh avtomatizatsii polyota*" (On Stability of Motion for a Variable Structure System in Control of Plants with Variable Parameters). In "*Variable Structure Systems and Their Application in Problems of Flight Automation*"), Nauka, Moscow, 1968.
63. Ishlinskii, A. Yu. Mekhanika giroskopicheskikh sistem (The Mechanics of Gyroscopic Systems), Izd-vo AN SSSR, Moscow, 1963.
64. Karpinskaya, N.N. Metod shtrafnykh funktsii i obosnovanie metoda Paina (The Method of Penalty Functions and Substantiation of the Pyne Method), *Avtomatika i telemekhanika*, Vol. 28, No. 1, 1967.
65. Kornilov, Yu. G. O vliyanii nechuvstvitel'nosti regulyatora na dinamiku nepryamogo regulirovaniya (On the Effect of Controller Insensitivity on the Dynamics of Indirect Control), *Avtomatika i telemekhanika*, Vol. 21, No. 1, 1950.
66. Korovin, S. K., Utkin, V. I. Primenenie skol'zyashchego rezhima v zadachakh staticheskoi optimizatsii (The Use of a Sliding Mode in Static Optimization), *Avtomatika i telemekhanika*, Vol. 33, No. 4, 1972.
67. Kortnev, A. V., Kostyleva, N. E. O kompensatsii vliyaniya vozmushchenii v odnom klasse sistem s peremennoi strukturoi (On Compensation of Disturbances in One Class of Variable Structure Systems), In "*Tekhnicheskaya kibernetika*", Nauka, Moscow, 1965.
68. Kostyleva, N. E. Vosstanovlenie differentsial'nykh uravnenii ob''ekta metodami sistem s peremennoi strukturoi (Restoration of Differential

Plant Equations by the Methods of Variable Structure Systems), *Avtomatika i telemekhanika*, Vol. 32, No. 10, 1971.
69. Krasovskiy, A. A. O vibratsionnom sposobe linearizatsii nekotorykh nelineinykh sistem (On a Vibrational Way of Linearization of Some Nonlinear Systems), *Avtomatika i telemekhanika*, Vol. 9, No. 1, 1948.
70. Krasovskiy, A. A. Dinamika nepreryvnykh samonastraivayushchikhsya sistem (The Dynamics of Continuous Self-Adjusting Systems), Fizmatgiz, Moscow, 1963.
71. Krotov, V. F. Metody resheniya variatsionnykh zadach na osnove dostatochnykh uslovii absolutnogo minimuma 1 (Methods to Solve Variational Problems by Using Sufficient Conditions of the Absolute Minimum 1), *Avtomatika i telemekhanika*, Vol. 23, No. 12, 1962.
72. Kulebakin, V. S. K teorii avtomaticheskikh vibratsionnykh regulyatorov dlya elektricheskikh mashin (On the Theory of Automatic Vibrational Controllers for Electrical Machinery), *Teoreticheskaya i eksperimental'naya elektrotekhnika*, No. 4, 1932.
73. Kukhtenko, A. I. Problema invariantnosti v avtomatike (The Invariance Problem in Automatic Control), Gos. Izd-vo tekhnicheskoy literatury USSR, Kiev, 1963.
74. Lyapunov, A. M. Obshchaya zadacha ob ustoichivosti dvizheniya (The General Problem of Motion Stability), Fizmatgiz, Moscow, 1959.
75. Meerov, M. V. Sistemy mnogosvyazannogo regulirovaniya (Multivariable Control Systems), Nauka, Moscow, 1967.
76. Medvedev, G. A., Tarasenko, V. P. Veroyatnostnye metody issledovaniya ekstremal'nykh sistem (Probabilistic Methods of Investigating Extremal Systems), Nauka, Moscow, 1967.
77. Morosanov, I. S. Releynye ekstremal'nye sistemy (Hill-Climbing Switching Systems), Nauka, Moscow, 1964.
78. Neymark, Yu. I. O skol'zyashchem rezhime releynykh sistem avtomaticheskogo regulirovaniya (On the Sliding Mode of Hill-Climbing Switching Systems), *Avtomatika i telemekhanika*, No. 1, 1957.
79. Neymark, Yu. I. Zamechanie k dokladu A. F. Filippova (A Note on A. F. Filippov's Paper), *Proceedings of the First IFAC Congress*, Izd-vo AN SSSR, 1961.
80. Nikol'skiy, G. N. K voprosu ob avtomaticheskoi ustoichivosti korablya na zadannom kurse (On Automatic Course Stability of a Ship), *Trudy tsentral'noy laboratorii provodnoy svyazi*, No. 1, 1934.
81. Petrov, B. N., Emel'yanov, S. V., Bermant, M. A., Utkin, V. I. Chuvstvitel'nost' sistem avtomaticheskogo upravleniya s peremennoi strukturoi (Sensitivity of Variable Structure Control Systems), *Proceedings of the International Symposium on Sensitivity of Variable Structure Control Systems*, Dubrovnik, 1964, Nauka, Moscow, 1968.
82. Petrov, B. N., Emel'yanov, S. V. Printsip postroeniya kombinirovannykh SAR s peremennoi strukturoi (The Design Principle of Combined Variable Structure Control Systems), DAN SSSR, Vol. 153, No. 5, 1963.
83. Petrov, B. N., Emel'yanov, S. V., Gritsenko, M. B. Avtonomnost' v mnogosvyazannykh sistemakh avtomaticheskogo upravleniya s peremennoi strukturoi (Autonomy in Multivariable Variable Structure Control Systems), DAN SSSR, Vol. 169, No. 1, 1966.

84. Petrov, B. N., Emel'yanov, S. V., Dubrovsky, E. N., Kortnev, A. V. O printsipe postroeniya bespoiskovoi adaptivnoi sistemy avtomaticheskogo upravleniya s peremennoi strukturoi (On the Principle of Design of a Nonsearching Adaptive Variable Structure Control System), DAN SSSR, Vol. 170, No. 6, 1966.
85. Petrov, B. N., Emel'yanov, S. V., Dudin, E.B. O vybore kriteriev sinteza kombinirovannykh sledyashchikh sistem s peremennoy strukturoy (On Selection of a Criterion for Design of Combined Variable Structure Control Systems), DAN SSSR, Vol. 153, No. 6, 1963.
86. Petrov, B. N., Emel'yanov, S. V., Kostyleva, N. E. Ob upravlenii lineinymi ob''ektami s peremennymi parametrami (On Control of Linear Plants with Variable Parameters), DAN SSSR, Vol. 155, No. 1, 1964.
87. Petrov, B. N., Emel'yanov, S. V., Utkin, V. I. Printsip postroeniya invariantnykh sistem avtomaticheskogo regulirovaniya s peremennoi strukturoi (A Design Principle for Invariant Variable Structure Control Systems), DAN SSSR, Vol. 154, No. 6, 1964.
88. Petrov, B. N., Ulanov, G. M., Emel'yanov, S. V. Optimizatsiya i invariantnost' v sistemakh avtomaticheskogo regulirovaniya s zhostkoi i peremennoi strukturoi (Optimization and Invariance in Control Systems with a Rigid and Variable Structure), *Proceedings of the Second IFAC Congress*. Izd-vo AN SSSR, Moscow, 1963.
89. Popovskiy, A. M. Linearizatsiya skol'zyashchego rezhima raboty regulyatora postoyannoi skorosti zakrytiya (Linearization of Sliding Operation Mode for a Constant Response Controller), *Avtomatika i telemekhanika*, Vol. 11, No. 3, 1950.
90. Rozenvasser, E. N., Yusupov, R. M. Chuvstvitel'nost' sistem avtomaticheskogo upravleniya (Sensitivity of Control Systems), Energiya, Moscow, 1969.
91. Rozonoer, L. I. Variatsionnyi podkhod k probleme invariantnosti, I (A Variational Approach to the Problem of Invariance, I) *Avtomatika i telemekhanika*, Vol. 24, No. 6, 1963.
92. Rozonoer, L. I. Variatsionnyi podkhod k probleme invariantnosti, II (A Variational Approach to the Problem of Invariance, II), *Avtomatika i telemekhanika*, Vol. 24, No. 7, 1963.
93. Taran, V. A. Regulirovanie lineinogo ob''ekta astaticheskim regulyatorom s peremennoi strukturoi bez ispol'zovaniya chistykh proizvodnykh v zakone upravleniya, I, II (Control of a Linear Plant by an Astatic Variable Structure Controller without Using Pure Derivatives in the Control Law, I, II), *Avtomatika i telemekhanika*, Vol. 25, Nos 10, 11, 1964.
94. Taran, V. A. Postroenie sistem avtomaticheskogo upravleniya s primeneniem kommutiruemykh fazosdvigayushchikh fil'trov. (Design of Control Systems with the Use of Commutating Phase-Shift Filters) Izv. AN SSSR, *Tekhnicheskaya kibernetika*, No. 4, 1965.
95. Trukhan, N. M. Vosstanovleniye differentsial'nogo uravneniya ob''ekta pri nalichii odnoy nelineinosti (Restoration of Differential Plant Equations in the Presence of One Nonlinearity), *Avtomatika i telemekhanika*, Vol. 32, No. 3, 1971.
96. Utkin, V. I. Primenenie sistem avtomaticheskogo regulirovaniya s peremennoi strukturoi dlya kompensatsii vozmushchenii, prilozhennykh

k razlichnym tochkam ob''ekta (The Use of Variable Structure Control Systems for Offsetting the Disturbances Applied to Different Points of the Plant), In "*Theory and Application of Automatic Control Systems*", Nauka, Moscow, 1964.

97. Utkin, V. I. O kompensatsii vynuzhdennoi sostavlyayushchey dvizheniya v sistemakh avtomaticheskogo regulirovaniya s peremennoi strukturoi (On Compensation of the Forced Motion Component in Variable Structure Control Systems), Izv. AN SSSR, *Tekhnicheskaya kibernetika*, No. 4, 1965.
98. Utkin, V. I. Kvaziinvariantnoe upravlenie vynuzhdennym dvizheniem lineinykh ob''ektov s peremennymi parametrami (Quasiinvariant Control of Forced Motion of Linear Plants with Variable Parameters), *Tekhnicheskaya kibernetika*, No. 5, 1966.
99. Utkin, V. I. Usloviya ustoychivosti vynuzhdennogo dvizheniya v sistemakh s peremennoi strukturoi (Stability Conditions for Forced Motion in Variable Structure Systems) In "*Variable Structure Systems and Their Application in Problems of Flight Automation*", Nauka, Moscow, 1968.
100. Utkin, V. I. Skol'zyashchie rezhimy v sistemakh s peremennoi strukturoi (Sliding Modes in Variable Structure Systems), *Teoretski prilog Automatika*, No. 3, Yugoslaviya, 1970.
101. Utkin, V. I. Ob uravneniyakh skol'zyashchego rezhima v razryvnykh sistemakh, I (On Sliding Mode Equations in Discontinuous Systems), *Avtomatika i telemekhanika*, Vol. 32, No. 12, 1971.
102. Utkin, V. I. Ob uravneniyakh skol'zyashchego rezhima v razryvnykh sistemakh, II (On Sliding Mode Equations in Discontinuous Systems), *Avtomatika i telemekhanika*, Vol. 33, No. 2, 1972.
103. Filippov, A. F. Differentsial'nye uravneniya s razryvnoi pravoi chast'yu (A Differential Equation with a Discontinuous Right-Hand Side), *Matematicheskii sbornik*, Vol. 51, No. 1, 1960.
104. Filippov, A. F. Prilozhenie teorii differentsial'nykh uravnenii s razryvnoi pravoi chast'yu k nelineinym zadacham avtomaticheskogo regulirovaniya (The Application of the Theory of Differential Equations with Discontinuous Right-Hand Side to Nonlinear Control Problems), *Proceedings of the First IFAC Congress*, Izd-vo AN SSSR, Moscow, 1961.
105. Tsypkin, Ya. Z. Teoriya releinykh sistem avtomaticheskogo regulirovaniya (Theory of Switching Control Systems), Gostekhizdat, Moscow, 1955.
106. Eidinov, R. M. K otsenke vremeni perekhodnykh protsessov v sistemakh avtomaticheskogo regulirovaniya s peremennoi strukturoi (On Estimating the Duration of Transient Processes in Variable Structure Control Systems), Izv. AN SSSR, *Tekhnicheskaya kibernetika*, No. 5, 1965.
107. Yakubovich, V. A. Metod matrichnykh neravenstv v teorii ustoichivosti reguliruemykh sistem (The Method of Matrix Inequalities in the Theory of Stability for Nonlinear Controlled Systems), *Avtomatika i telemekhanika*, Vol. 25, No. 7, 1964.
108. Andre, J., Seibert, P. Über stückweise lineare Differentialgleichungen, die bei Regelungsproblem auftreten, I, Arch. der Math., 7, Nr. 2, 1956,

109. Andre, J., Seibert, P. Über stückweise lineare Differentialgleichungen, die bei Regelungsproblem auftreten, II, Arch. der Math., 7, Nr. 3, 1956.
110. Draženovič, B. The Invariance Conditions in Variable Structure Systems. *Automatica*, Vol. 5, No. 3, Pergamon Press, 1969.
111. Draženovič, B. Sintera sistema sa promjenljivom strukturom as invarijantnim kvetangem u kliznom rezimu, *Automatica*, N. 5-6, Yugoslavia, 1970.
112. Draženovič, B. O stabilnosti sistema sa promjenljivom strukturom, *Automatica*, N. 5-6, Yugoslavia, 1970.
113. Emel'yanov, S. V., Utkin, V. I. Invariant Solutions of Differential Equations with Discontinuous Coefficients. Design Principles of Variable Structure Control Systems. Mathematical Theory of Control. *Proceedings of a Conference held in Los Angeles*, Academic Press, 1967.
114. Matič, B. Principi realisacije modela osjetljivostii systems s promienljivom strukturom kod kojih je usrostavljen klizni rezim Energoinvest, No. 2, Yugoslavia, 1971.
115. Wilde, D., Beightler, C. Foundations of Optimization. Prentice-Hall, Inc., 1967.

TO THE READER

MIR PUBLISHERS WELCOME YOUR COMMENTS ON THE CONTENT, TRANSLATION AND DESIGN OF THIS BOOK. WE WOULD ALSO BE PLEASED TO RECEIVE ANY PROPOSALS YOU CARE TO MAKE ABOUT OUR FUTURE PUBLICATIONS.

OUR ADDRESS IS:

USSR, 129820, MOSCOW I-110, GSP
PERVY RIZHSKY PEREULOK, 2
MIR PUBLISHERS

Printed in the Socialist Republic of Romania

ANOTHER REFERENCE BOOK ON THE SUBJECT

A. V. NETUSHIL, D.Sc. (Editor)
THEORY OF AUTOMATIC CONTROL

A textbook for engineering students specializing in automation and telemechanics, computer engineering, and instrumentation. Written by a group of authors at the Moscow Power Institute, under the editorship of Prof. Anatoly Netushil, taking the course of lectures delivered by Prof. Leo Goldfarb as the nucleus of the presentation. Develops a structural approach to systems and frequency methods of analysing and synthesizing systems. Considerable attention is given to the investigation of the quality of control and to modelling. The more complex links employed with objects with distributed parameters are examined as well as typical links. The presentation falls into three main parts: linear, non-linear, and optimal systems. The book will be found useful by engineers working with control systems who want to brush up on the theory of linear systems.

MIR PUBLISHERS · MOSCOW

About the Book

This book presents the latest developments in theory of discontinuous dynamic systems and theory of variable structure control systems. Mathematical methods are described for the investigation of so-called sliding modes arising in dynamic systems with discontinuities in motion equations. The intentional introduction of sliding modes into variable structure systems leads to adaptivity and disturbance rejection properties which make this class of control systems applicable to many control problems. The fundamental concepts and design methods of variable structure systems are considered both for control of time-invariant and time-varying plants with known and unmeasured parameters and disturbances, and for optimization and identification.

About the Author

Vadim I. Utkin was born in Moscow, USSR, in 1937. He received an engineering degree from the Moscow Power Institute (1960) and a Candidate of Science (1964) and the Doctor of Science (1972) degree from the Institute of Control Sciences, USSR Academy of Sciences.
Presently, Dr. Utkin is the director of the Variable Structure Systems Laboratory at the Institute of Control Sciences where he also conducts his research.
He also holds a teaching position as a professor at the Moscow Institute of Steel and Alloys.
As one of the originators of the concept of the variable structure control, Dr. Utkin was awarded in 1972 the Lenin Prize, the highest Soviet scientific award.
His most recent research concentrates on applying the variable structure concept to discontinuous dynamic systems.
Dr. V. Utkin is a member of the IFAC Theory Committee and an Associate Editor of the IFAC Journal "Automatica".
In 1975-76 he was a visiting professor at the University of Illinois, Urbana, USA.

MIR PUBLISHERS MOSCOW